IL S3 BK DI8 DO4 2TX-PAC - Bus coupler

2692380

https://www.phoenixcontact.com/us/products/2692380

Please be informed that the data shown in this PDF document is generated from our online catalog. Please find the complete data in the user documentation. Our general terms of use for downloads are valid.



Inline, Bus coupler, Sercos, RJ45 jack, Digital inputs: 8, 24 V DC, connection technology: 3-conductor, Digital outputs: 4, 24 V DC, 500 mA, connection technology: 3-conductor, transmission speed in the local bus: 500 kbps / 2 Mbps, degree of protection: IP20, including inline connectors, marking fields, and end plate

Product description

The bus coupler with integrated I/Os is intended for use within a Sercos® network and represents the link to the Inline I/O system. Up to 63 Inline devices can be connected to the bus coupler. The bus coupler supports a maximum of 16 PCP devices. A corresponding SDDML file is available for integrating the Inline station into the programming system. This file can be downloaded at: phoenixcontact.net/product/2692380.

Your advantages

- 2 Ethernet ports
- Automatic detection of the transmission speed in the local bus (500 kbps or 2 Mbps)
- 8 digital inputs, 4 digital outputs (on-board)
- Minimum Sercos cycle time of 250 µs
- FSP-IO (Function Specific Profile-IO) for modular I/O devices
- Maximum of 6 realtime connections
- Hot plugging of participants in Sercos network
- Diagnostics trace
- Internet Protocol Services (IPS)
- Sercos specification V1.3.1
- Sercos diagnostic LED S and communication phase LED CP

ELEKTROGERÄTE RÜCKNAHME

Commercial data

Item number	2692380
Packing unit	1 pc

Minimum order quantity	1 pc
Sales key	DR01
Product key	DRI11C
GTIN	4046356325882
Weight per piece (including packing)	343.6 g
Weight per piece (excluding packing)	298 g
Customs tariff number	85389091
Country of origin	DE

Technical data

Dimensions

Dimensional drawing	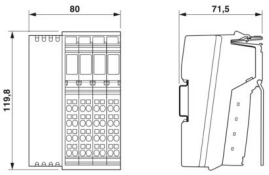
Width	80 mm
Height	119.8 mm
Depth	71.5 mm
Note on dimensions	Specfications with connectors

Notes

Note on application

Note on application	Only for industrial use

Mounting

Mounting type	DIN rail mounting

Material specifications

Color (Housing)	green (RAL 6021)

Interfaces

Sercos

Number of interfaces	2
Connection method	RJ45 jack

Inline local bus

Number of interfaces	1
Connection method	Inline data jumper
Transmission speed	500 kbps / 2 Mbps (automatic detection, no combined system)

Sercos

Equipment type	Sercos slave

System properties

System limits

Number of supported devices	max. 63 (per station)
Number of local bus devices that can be connected	max. 63
Number of devices with parameter channel	max. 16
Number of supported branch terminals with remote bus branch	0

Programming data

Register length (master)	512 Byte

Input data

Digital:

Input name	Digital inputs
Description of the input	EN 61131-2 type 1
Number of inputs	8
Connection method	Inline connector
Connection technology	3-conductor
Input voltage	24 V DC
Input voltage range "0" signal	-30 V DC ... 5 V DC
Input voltage range "1" signal	15 V DC ... 30 V DC
Nominal input voltage U_{IN}	24 V DC
Nominal input current at U_{IN}	typ. 3 mA
Current flow	Limited to 3 mA, maximum
Permissible conductor length to the sensor	100 m
Typical input current per channel	typ. 3 mA
Typical response time	approx. 500 µs
Protective circuit	Reverse polarity protection; Suppressor diode

Output data

Digital:

Output name	Digital outputs
Connection method	Inline connector
Connection technology	3-conductor
Number of outputs	4
Protective circuit	Short-circuit and overload protection; Freewheeling circuit in the output driver
Output voltage	24 V DC -1 V (At nominal current)
Limitation of the voltage induced on circuit interruption	approx. -30 V
Max. current carrying capacity per output	max. 500 mA
Maximum output current per module	max. 2 A
Nominal output voltage	24 V DC
Switching power with ground connection interrupt	typ. 100 mW (at 1 kΩ load resistance)
Output voltage when switched off	max. 500 mV
Output current when switched off	max. 500 µA (When not loaded, a voltage can be measured even at an output that is not set.)
Nominal load, inductive	12 VA (1.2 H, 48 Ω)
Nominal load, lamp	12 W
Nominal load, ohmic	12 W
Signal delay when switching off an ohmic nominal load	max. 250 µs (in the case of 0.5 A load)
Signal delay when switching on an ohmic nominal load	max. 50 µs (in the case of 0.5 A load)

Maximum operating frequency with inductive nominal load	0.5 Hz (1.2 H, 48 Ω)
Behavior with overload	Auto restart
Behavior with inductive overload	Output can be destroyed
Behavior at voltage switch-off	The output follows the power supply without delay
Reverse voltage resistance to short pulses	Reverse voltage proof
Resistance to permanent reverse voltage	max. 2 A
Signal delay	< 40 µs (t_{on}, no load)
	< 50 µs (t_{on}, load = 0.5 A)
	< 350 µs (t_{off}, no load)
	< 235 µs (t_{off}, load = 0.5 A)
Overcurrent shut-down	min. 0.7 A
Output current with ground connection interrupt when switched off	max. 25 mA

Product properties

Product type	I/O component
Product family	Inline
Type	modular
Scope of supply	including inline connectors, marking fields, and end plate
No. of channels	12
Diagnostics messages	Short-circuit or overload of the digital outputs yes
	Sensor supply failure yes
	Failure of the actuator supply yes

Insulation characteristics

Overvoltage category	II (IEC 60664-1, EN 60664-1)
Pollution degree	2 (IEC 60664-1, EN 60664-1)

Electrical properties

Maximum power dissipation for nominal condition	6.8 W
Protective circuit	Surge protection, protection against polarity reversal of the supply voltage; 35 V suppressor diode

Potentials: Bus coupler supply U_{BK}; Communications power U_L (7.5 V) and the analog supply U_{ANA} (24 V) are generated from the bus coupler supply.

Supply voltage	24 V DC (via Inline connector)
Supply voltage range	19.2 V DC ... 30 V DC (including all tolerances, including ripple)
Current draw	max. 1 A (with max. number of connected I/O terminal blocks)
	typ. 60 mA (without connected I/O terminal blocks)

Potentials: Communications power (U_L)

Supply voltage	7.5 V DC
Power supply	max. 0.8 A

Potentials: Supply of analog modules (U_{ANA})

Supply voltage	24 V DC
Supply voltage range	19.2 V DC ... 30 V DC (including all tolerances, including ripple)

Power supply	max. 0.5 A

Potentials: Main circuit supply (U_M)

Supply voltage	24 V DC (via Inline connector)
Supply voltage range	19.2 V DC ... 30 V DC (including all tolerances, including ripple)
Power supply	max. 8 A (sum of U_M + U_S)
Current draw	max. 8 A
	min. 3 mA (without connected peripherals)

Potentials: Segment circuit supply (U_S)

Supply voltage	24 V DC (via Inline connector)
Supply voltage range	19.2 V DC ... 30 V DC (including all tolerances, including ripple)
Power supply	max. 8 A (sum of U_M + U_S)
Current draw	max. 8 A
	min. 3 mA (without connected peripherals)

Connection data

Connection technology

Connection name	Inline connector

Inline connector

Connection method	Spring-cage connection
Conductor cross-section, rigid	0.08 mm² ... 1.5 mm²
Conductor cross-section, flexible	0.08 mm² ... 1.5 mm²
Conductor cross-section AWG	28 ... 16
Stripping length	8 mm

Environmental and real-life conditions

Ambient conditions

Ambient temperature (operation)	-25 °C ... 60 °C
Degree of protection	IP20
Air pressure (operation)	70 kPa ... 106 kPa (up to 3000 m above sea level)
Air pressure (storage/transport)	70 kPa ... 106 kPa (up to 3000 m above sea level)
Ambient temperature (storage/transport)	-40 °C ... 85 °C
Permissible humidity (operation)	10 % ... 95 % (non-condensing)
Permissible humidity (storage/transport)	10 % ... 95 % (non-condensing)

Mechanical test

Vibration resistance in accordance with EN 60068-2-6/IEC 60068-2-6	5g
Shock in accordance with EN 60068-2-27/IEC 60068-2-27	25g

Standards and regulations

Protection class	III (IEC 61140, EN 61140, VDE 0140-1)

Drawings

Dimensional drawing

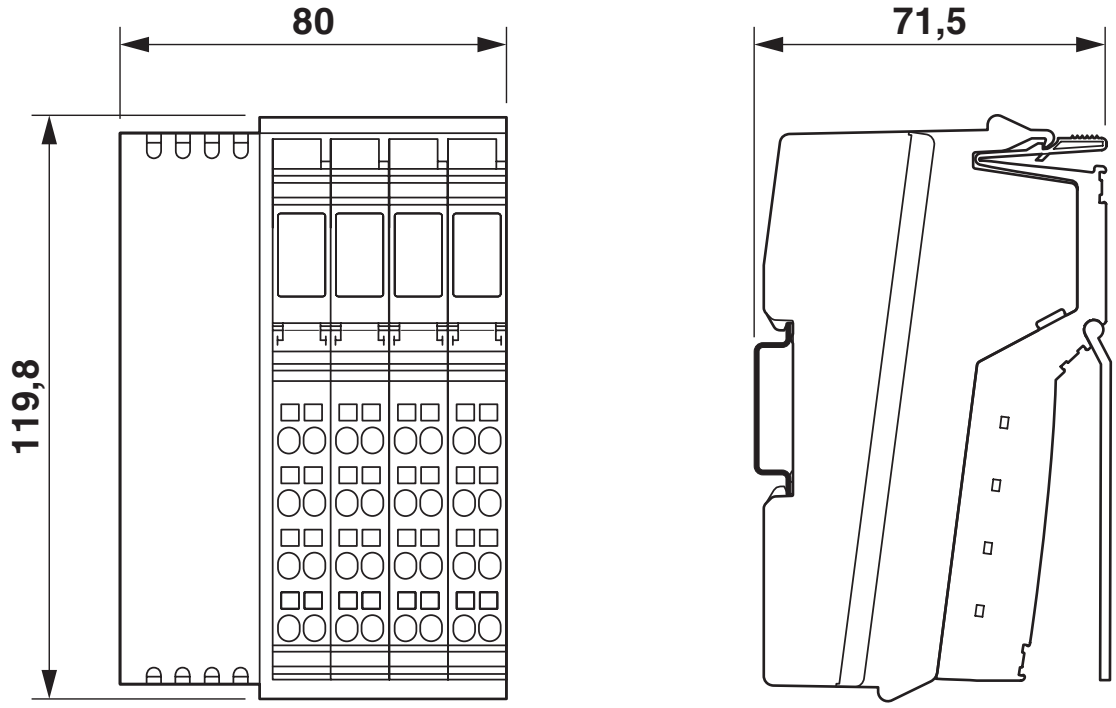

Dimensional drawing

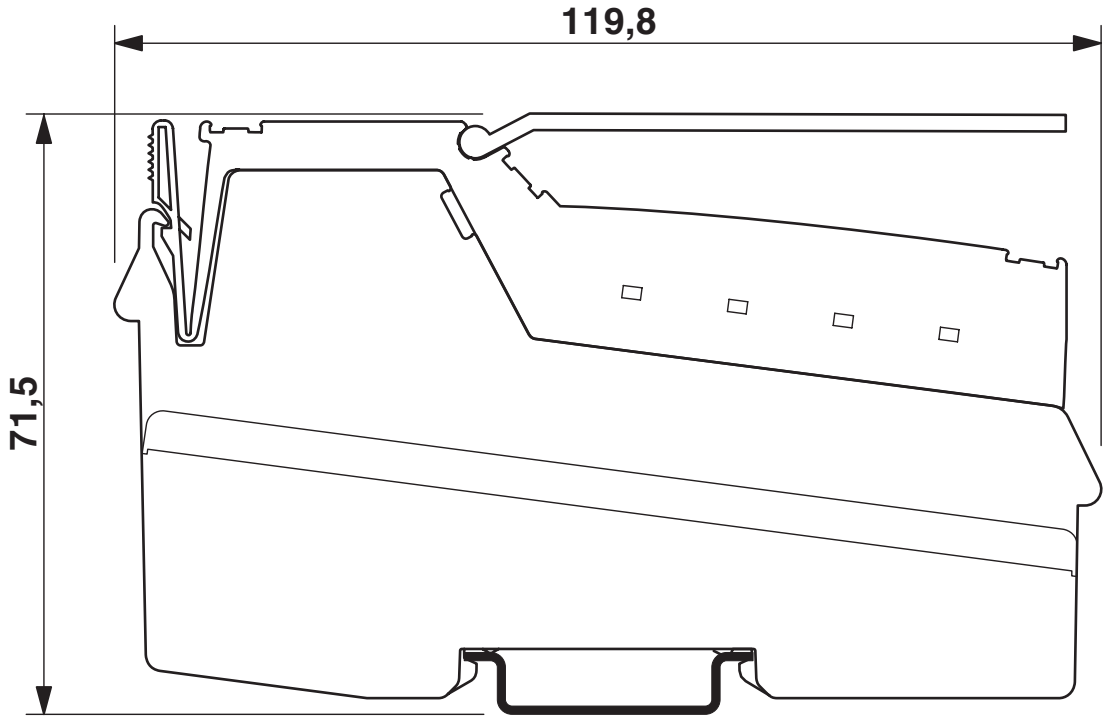

Connection diagram

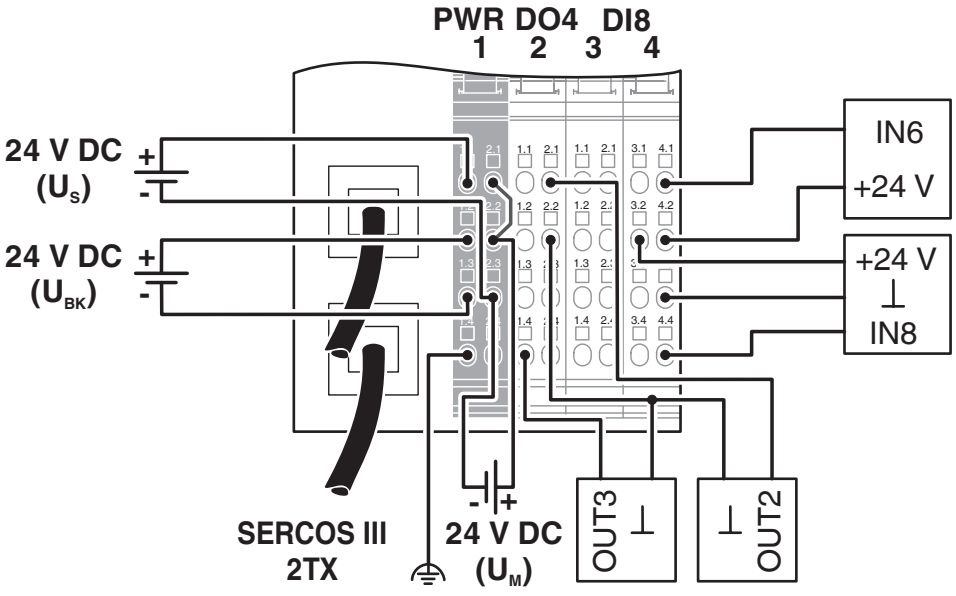

Block diagram

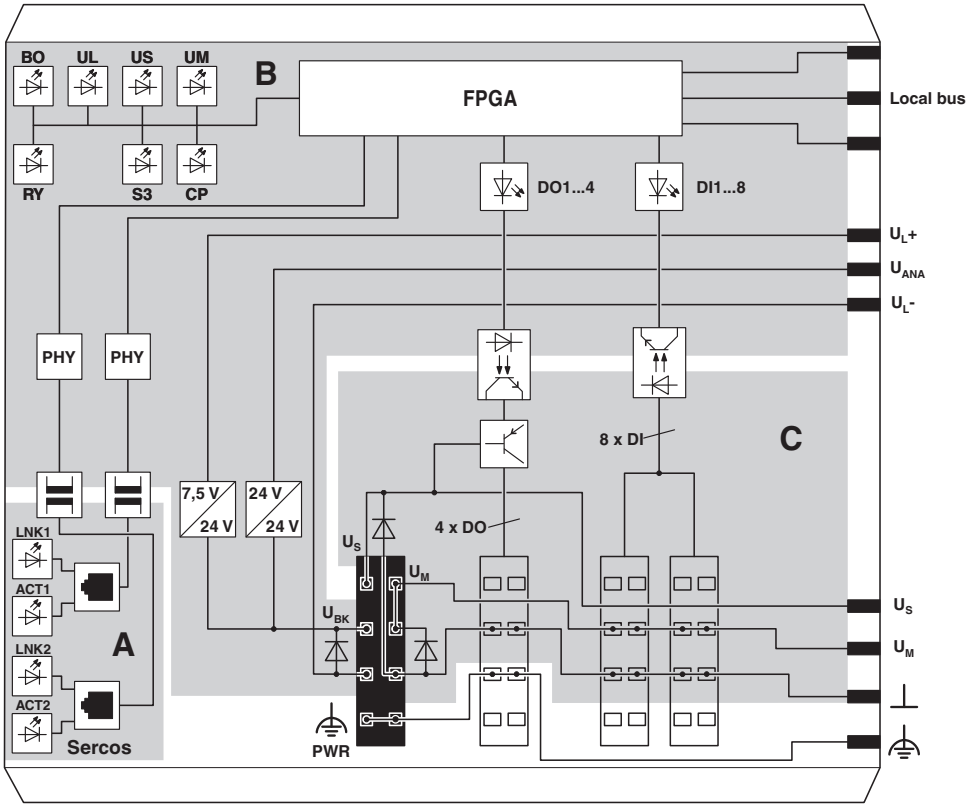

Approvals

To download certificates, visit the product detail page: https://www.phoenixcontact.com/us/products/2692380

EAC
Approval ID: TR_TS_D_00850-20

UL Listed
Approval ID: FILE E 140324

cUL Listed
Approval ID: FILE E 140324

Classifications

ECLASS

ECLASS-13.0	27242608
ECLASS-15.0	27242608

ETIM

ETIM 10.0	EC001604

UNSPSC

UNSPSC 21.0	32151600

Environmental product compliance

EU RoHS

Fulfills EU RoHS substance requirements	Yes
Exemption	7(a), 7(a)-I, 7(c)-I

China RoHS

Environment friendly use period (EFUP)	EFUP-50
	An article-related China RoHS declaration table can be found in the download area for the respective article under "Manufacturer declaration". For all articles with EFUP-E, no China RoHS declaration table issued and required.

EU REACH SVHC

REACH candidate substance (CAS No.)	4,4'-isopropylidenediphenol(CAS: 80-05-7)
	Lead(CAS: 7439-92-1)
SCIP	304c9b95-6ddf-430e-8bc3-3711d6286f17

Phoenix Contact 2026 © - all rights reserved
https://www.phoenixcontact.com

Phoenix Contact USA
586 Fulling Mill Road
Middletown, PA 17057, United States
(+717) 944-1300
info@phoenixcon.com