IB IL 24 DI 4-2MBD-PAC - Digital module

2692306

https://www.phoenixcontact.com/us/products/2692306

Please be informed that the data shown in this PDF document is generated from our online catalog. Please find the complete data in the user documentation. Our general terms of use for downloads are valid.



Inline, Digital input terminal, Digital inputs: 4, 24 V DC, connection technology: 3-conductor, transmission speed in the local bus: 2 Mbps, degree of protection: IP20, including Inline connector and labeling field

Product description

Inline terminals with “2 MBD” added to their item designation work with a transmission speed of 2 Mbps. These terminal blocks are discontinued or no longer in the range. If you require this transmission speed, please ask your local Phoenix Contact representative. If you can work with a transmission speed of 500 kbps, select as a replacement the corresponding variant that does not have “2MBD” added to its item designation. Please note that a uniform transmission speed must always be used within one inline station. The terminal is designed for use within an Inline station. It is used to acquire digital signals.

Your advantages

- 4 digital inputs
- Connection of sensors in 2- and 3-conductor technology
- Maximum permissible load current per sensor: 250 mA
- Maximum permissible load current from the terminal: 1 A

ELEKTROGERÄTE RÜCKNAHME

Commercial data

Item number	2692306
Packing unit	1 pc
Minimum order quantity	1 pc
Sales key	DR01
Product key	DRI131
GTIN	4046356309912
Weight per piece (including packing)	91.5 g

Weight per piece (excluding packing)	66 g
Customs tariff number	85389091
Country of origin	DE

Technical data

Dimensions

Dimensional drawing	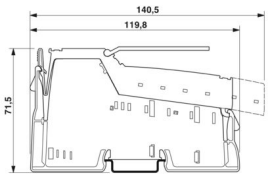
Width	12.2 mm
Height	140.5 mm
Depth	71.5 mm
Note on dimensions	Housing dimensions

Notes

Note on application	Only for industrial use

Mounting

Mounting type	DIN rail mounting

Material specifications

Color (Housing)	green (RAL 6021)

Interfaces

Inline local bus

Number of interfaces	2
Connection method	Inline data jumper
Transmission speed	2 Mbps

System properties

Programming data

Length code (hex)	41
ID code (dec.)	190
Length code (dec)	65
Process data channel	4 bit
Input address area	4 bit
Output address area	0 bit
Parameter channel (PCP)	0 bit
Register length (bus)	4 bit

Fieldbus data telegram (PROFIBUS)

Required parameter data	1 Byte
Required configuration data	4 Byte

Input data

Digital:

Input name	Digital inputs
Description of the input	IEC 61131-2 type 1
Number of inputs	4
Connection method	Spring-cage connection
Connection technology	3-conductor
Input voltage	24 V DC
Input voltage range "0" signal	-3 V DC ... 5 V DC
Input voltage range "1" signal	15 V DC ... 30 V DC
Nominal input voltage U_{IN}	24 V DC
Nominal input current at U_{IN}	min. 3 mA (at nominal voltage)
Permissible conductor length to the sensor	30 m
Protective circuit	Short-circuit and overload protection

Product properties

Product type	I/O component
Product family	Inline
Type	modular
Scope of supply	including Inline connector and labeling field
No. of channels	4
Operating mode	Process data operation with 4 bits

Insulation characteristics

Overvoltage category	II (IEC 60664-1, EN 60664-1)
Pollution degree	2 (IEC 60664-1, EN 60664-1)

Electrical properties

Maximum power dissipation for nominal condition	0.4 W

Potentials: Communications power (U_L)

Supply voltage	7.5 V DC (via voltage jumper)
Current draw	max. 51 mA

Potentials: Segment circuit supply (U_S)

Supply voltage	24 V DC (via voltage jumper)
Supply voltage range	19.2 V DC ... 30 V DC (including all tolerances, including ripple)
Current draw	max. 1 A

Supply: Module electronics

Supply voltage	24 V DC
Supply voltage range	19.2 V DC ... 30 V DC (including all tolerances, including ripple)

Electrical isolation/isolation of the voltage ranges

Test voltage: 7.5 V supply (bus logics)/24 V supply (I/O)	500 V AC, 50 Hz, 1 min

Test voltage: 7.5 V supply (bus logic)/functional ground	500 V AC, 50 Hz, 1 min
Test voltage: 24 V supply (I/O) / functional ground	500 V AC, 50 Hz, 1 min

Connection data

Connection technology

Connection name	Inline connector

Inline connector

Connection method	Spring-cage connection
Conductor cross-section, rigid	0.08 mm² ... 1.5 mm²
Conductor cross-section, flexible	0.08 mm² ... 1.5 mm²
Conductor cross-section AWG	28 ... 16
Stripping length	8 mm

Environmental and real-life conditions

Ambient conditions

Ambient temperature (operation)	-25 °C ... 55 °C
Degree of protection	IP20
Air pressure (operation)	70 kPa ... 106 kPa (up to 3000 m above sea level)
Air pressure (storage/transport)	70 kPa ... 106 kPa (up to 3000 m above sea level)
Ambient temperature (storage/transport)	-25 °C ... 85 °C
Permissible humidity (operation)	10 % ... 95 % (non-condensing)
Permissible humidity (storage/transport)	10 % ... 95 % (non-condensing)

Mechanical test

Vibration resistance in accordance with EN 60068-2-6/IEC 60068-2-6	5g
Shock in accordance with EN 60068-2-27/IEC 60068-2-27	25g

Standards and regulations

Protection class	III (IEC 61140, EN 61140, VDE 0140-1)

Drawings

Dimensional drawing

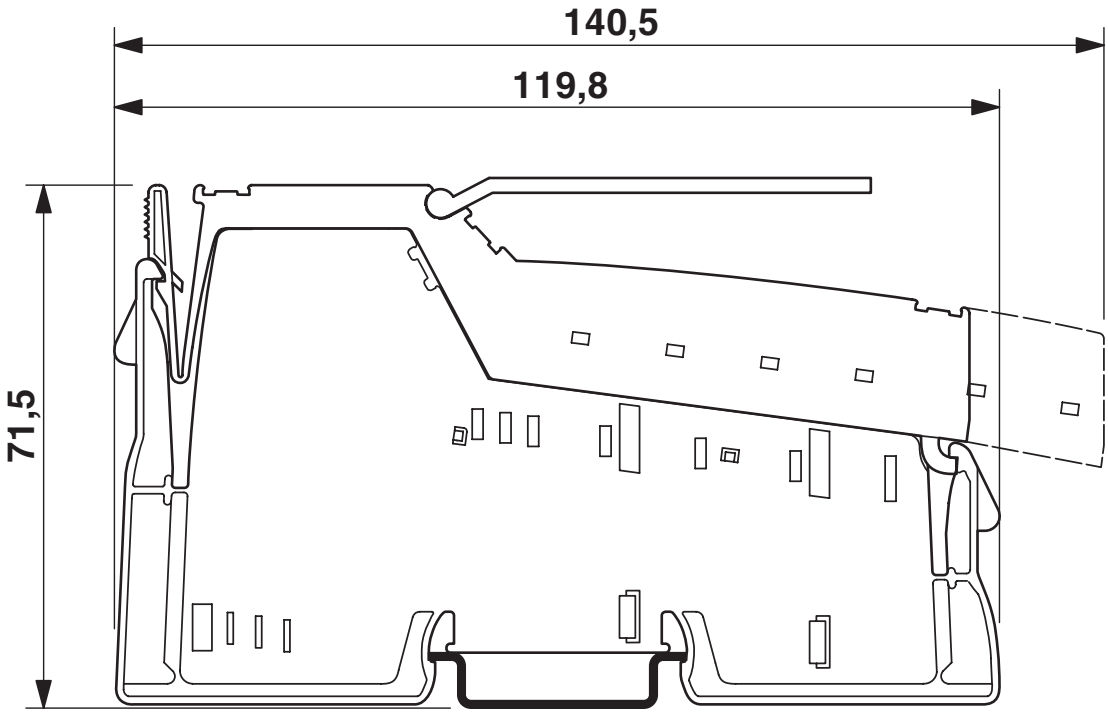

Connection diagram

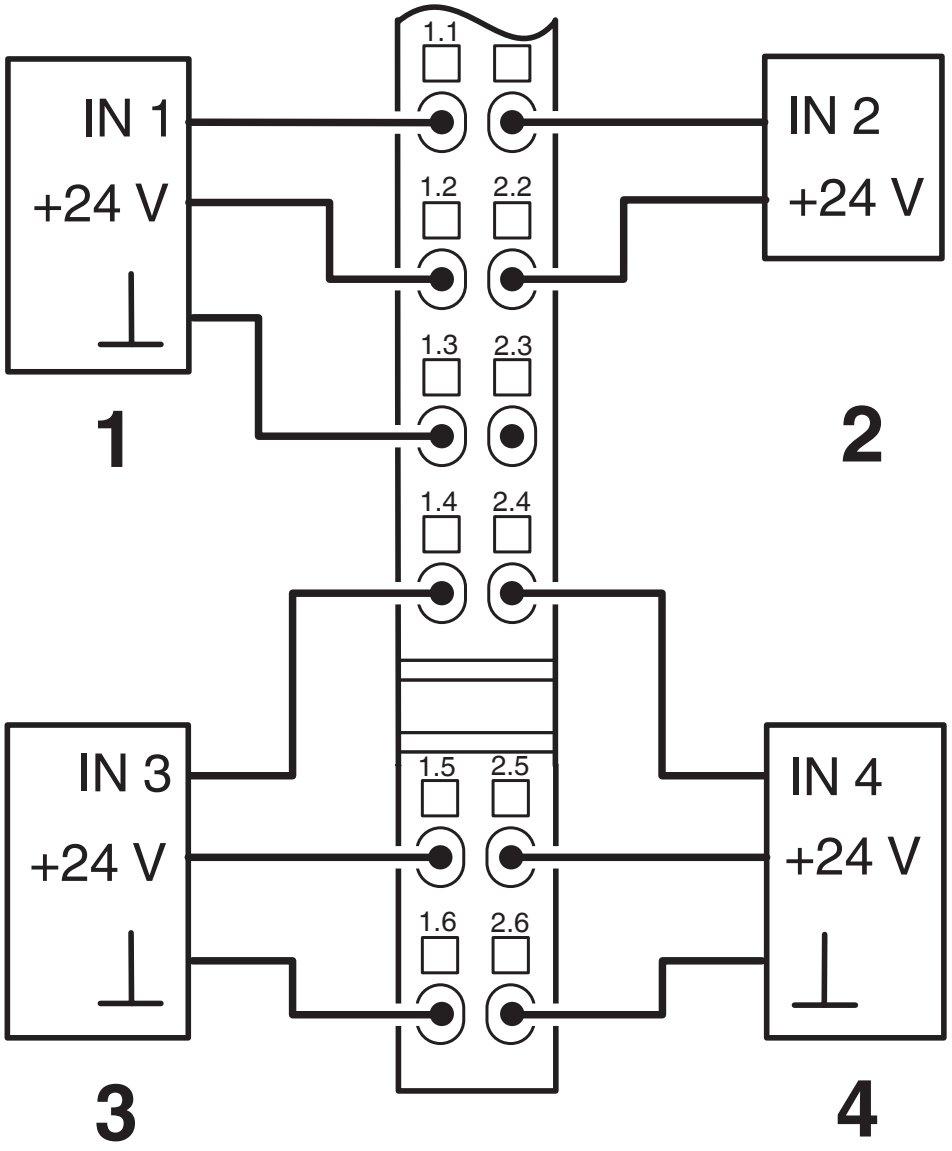

Block diagram

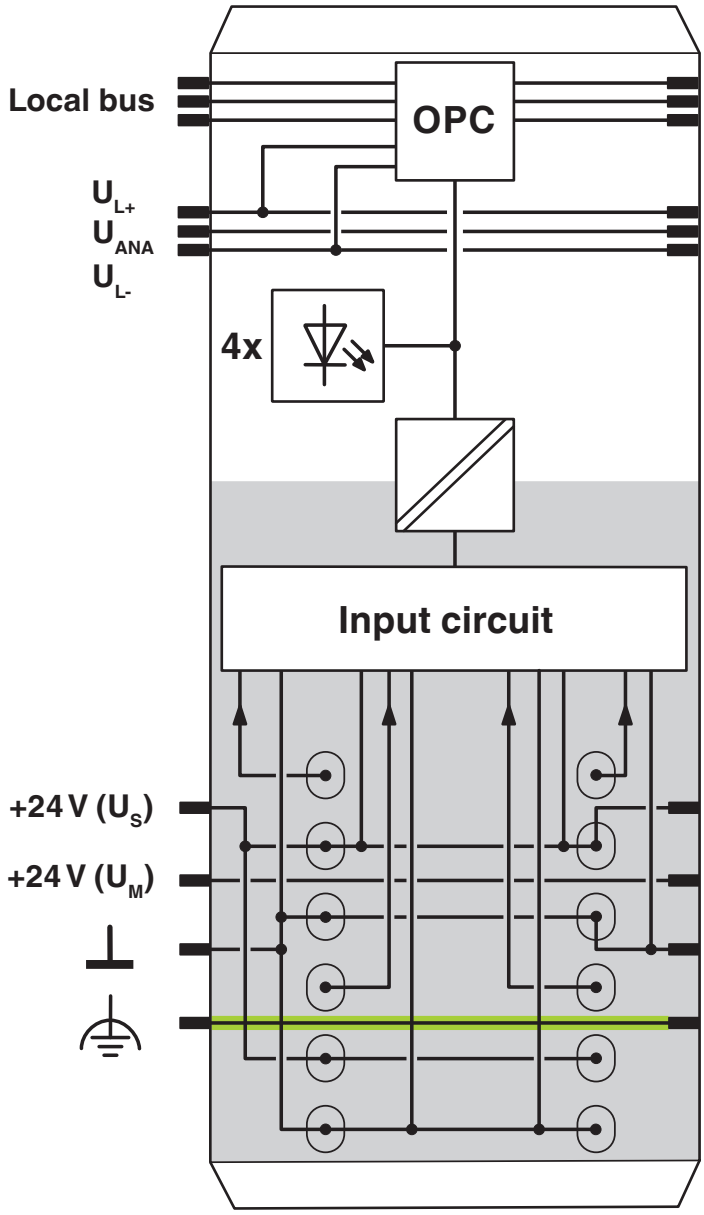

Approvals

To download certificates, visit the product detail page: https://www.phoenixcontact.com/us/products/2692306

cULus Listed
Approval ID: E140324

Classifications

ECLASS

ECLASS-13.0	27242604
ECLASS-15.0	27242604

ETIM

ETIM 10.0	EC001599

UNSPSC

UNSPSC 21.0	32151600

Environmental product compliance

EU RoHS

Fulfills EU RoHS substance requirements	Yes
Exemption	7(a), 7(c)-I

China RoHS

Environment friendly use period (EFUP)	EFUP-50
	An article-related China RoHS declaration table can be found in the download area for the respective article under "Manufacturer declaration". For all articles with EFUP-E, no China RoHS declaration table issued and required.

EU REACH SVHC

REACH candidate substance (CAS No.)	Lead(CAS: 7439-92-1)
SCIP	d5e2267c-8478-48d0-9344-f136423f34a4

Phoenix Contact 2026 © - all rights reserved
https://www.phoenixcontact.com

Phoenix Contact USA
586 Fulling Mill Road
Middletown, PA 17057, United States
(+717) 944-1300
info@phoenixcon.com