VIP-2/SC/D15SUB/M/LED - Termination board

2322155

https://www.phoenixcontact.com/us/products/2322155

Please be informed that the data shown in this PDF document is generated from our online catalog. Please find the complete data in the user documentation. Our general terms of use for downloads are valid.



VARIOFACE module, with screw connection and D-Subminiature pin strip, for mounting on NS 35 rails, with LED, 15-pos.

Your advantages

- 9-pos. ... 50-pos.
- Metal foot
- In accordance with IEC 60603-13
- Screw connection
- 1:1 connection
- In accordance with IEC 60603-13

Commercial data

Item number	2322155
Packing unit	1 pc
Minimum order quantity	1 pc
Sales key	C423
Product key	DK2112
GTIN	4046356451772
Weight per piece (including packing)	97 g
Weight per piece (excluding packing)	115.8 g
Customs tariff number	85366990
Country of origin	US

Technical data

Product properties

Product type	Interface module
Product family	VARIOFACE Professional
Number of positions	15

Insulation characteristics

Overvoltage category	II
Pollution degree	2

Electrical properties

Operating voltage (DC)	24 V DC
Current (per branch)	≤ 2.5 A

Connection data

Field level

Connection in acc. with standard	IEC / EN
Connection method	Screw connection
Stripping length	8 mm
Screw thread	M3
Conductor cross-section rigid	0.2 mm² ... 4 mm²
Conductor cross-section flexible	0.2 mm² ... 2.5 mm²
Conductor cross-section AWG	24 ... 12
Tightening torque	0.5 Nm ... 0.6 Nm

Controller level

Connection method	D-SUB pin strip
Number of connections	1
Number of positions	15

Signaling

Status display	LED
Status display present	yes

Dimensions

Item dimensions

Width	50 mm
Height	65.5 mm
Depth	45.1 mm

Material specifications

Color	gray (RAL 7042)
Flammability rating according to UL 94	V0

Housing insulation material	Polyamide PA non-reinforced

Environmental and real-life conditions

Ambient conditions

Ambient temperature (operation)	-20 °C ... 50 °C
Ambient temperature (storage/transport)	-20 °C ... 70 °C

Standards and regulations

Standards/regulations	IEC 60664
	DIN EN 50178

Mounting

Mounting type	DIN rail mounting
Mounting position	any

Notes

Notes on operation	For proper use, the specifications of the installation directive (see Downloads) must be observed. For applications or use with third-party products, the specifications, and the safety and warning instructions of the respective third-party manufacturer must also be met.

Drawings

Dimensional drawing

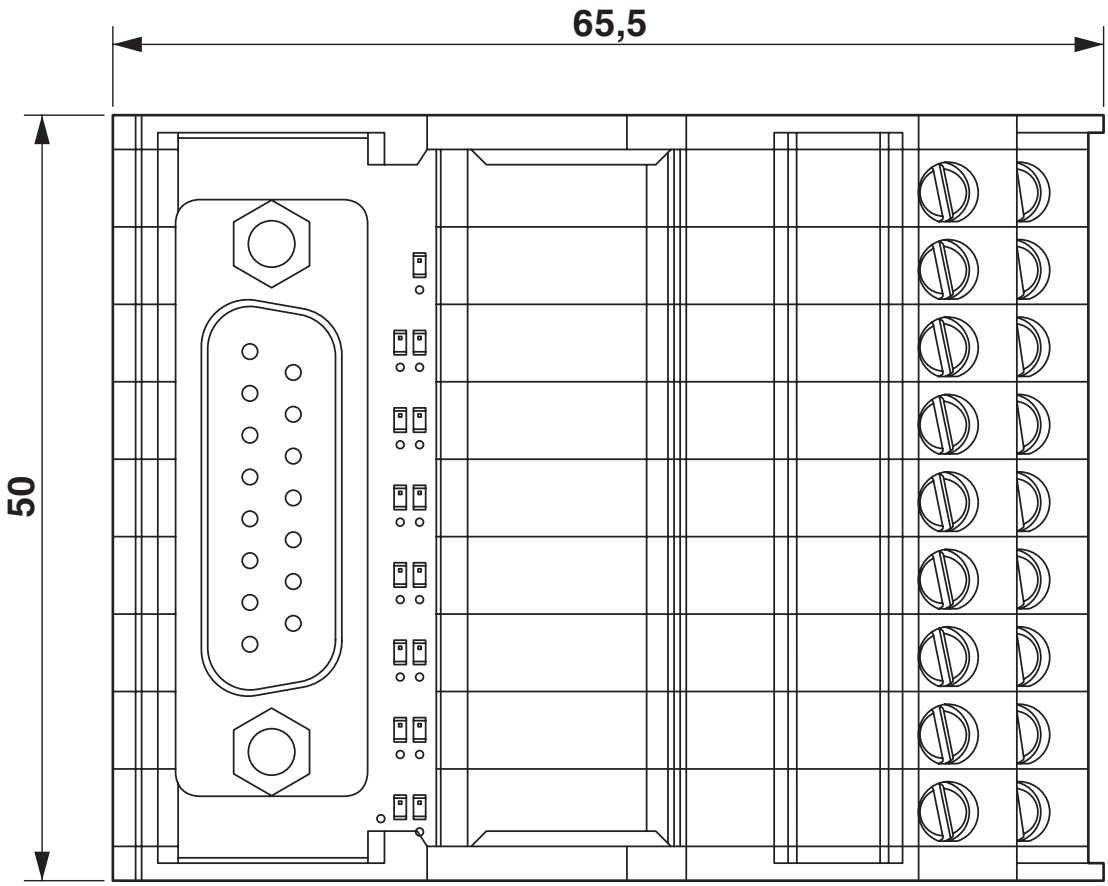

Circuit diagram

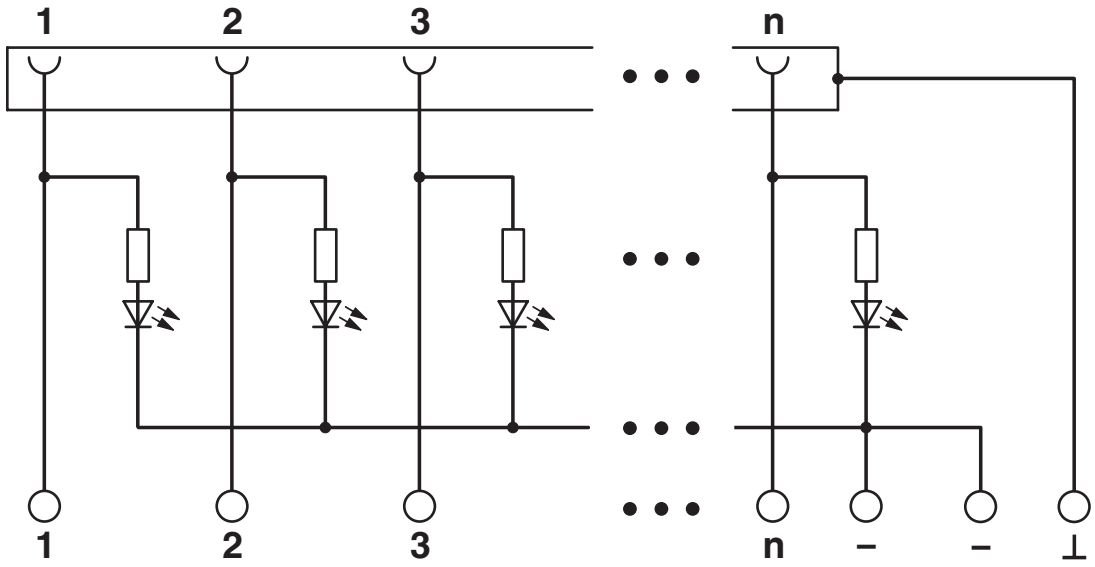

Approvals

To download certificates, visit the product detail page: https://www.phoenixcontact.com/us/products/2322155

CSA
Approval ID: 2122203

	Nominal voltage U_N	Nominal current I_N	Cross section AWG	Cross section mm^2
keine				
	24 V	2 A	28 - 12	-

cUL Recognized
Approval ID: E238705

	Nominal voltage U_N	Nominal current I_N	Cross section AWG	Cross section mm^2
keine				
	24 V	2 A	30 - 12	-

UL Recognized
Approval ID: E238705

	Nominal voltage U_N	Nominal current I_N	Cross section AWG	Cross section mm^2
keine				
	24 V	2 A	30 - 12	-

CSAus
Approval ID: 2122203

	Nominal voltage U_N	Nominal current I_N	Cross section AWG	Cross section mm^2
keine				
	24 V	2 A	28 - 12	-

Classifications

ECLASS

ECLASS-13.0	27141152
ECLASS-15.0	27141152

ETIM

ETIM 10.0	EC002780

UNSPSC

UNSPSC 21.0	39121400

Environmental product compliance

EU RoHS

Fulfills EU RoHS substance requirements	Yes
Exemption	6(c), 7(c)-I

China RoHS

Environment friendly use period (EFUP)	EFUP-50
	An article-related China RoHS declaration table can be found in the download area for the respective article under "Manufacturer declaration". For all articles with EFUP-E, no China RoHS declaration table issued and required.

EU REACH SVHC

REACH candidate substance (CAS No.)	Lead(CAS: 7439-92-1)
SCIP	a01e20b5-c144-4542-b2e5-8dddee29526a

Phoenix Contact 2026 © - all rights reserved
https://www.phoenixcontact.com

Phoenix Contact USA
586 Fulling Mill Road
Middletown, PA 17057, United States
(+717) 944-1300
info@phoenixcon.com