QUINT4-CAP/24DC/5/4KJ - DC UPS with integrated capacity

2320539

https://www.phoenixcontact.com/us/products/2320539

Please be informed that the data shown in this PDF document is generated from our online catalog. Please find the complete data in the user documentation. Our general terms of use for downloads are valid.

CRA-READY



QUINT DC UPS with integrated capacitor, with maintenance-free energy storage based on double-layer capacitor, USB (Modbus/RTU), DIN rail mounting, input: 24 V DC, output: 24 V DC / 5 A / 4 kJ incl. mounted UTA 107 universal DIN rail adapter. The “POWER MANAGEMENT SUITE” software (Item No. 1252232) available in the download area can be used for configuration.. The product is being prepared for compliance with the Cyber Resilience Act (CRA).

Product description

The maintenance-free QUINT CAP capacity module is ideal for cyclical failures lasting up to 30 seconds. It combines an electronic switch-over unit and maintenance-free, capacitor-based energy storage in the same housing. The USB interface makes it convenient to shut down your PC.

Your advantages

- Convenient shutdown of PCs
- Maintenance-free with a long service life
- Space savings, thanks to the compact design
- Long buffer time, thanks to high memory capacity
- Lockable USB interface for connecting to industrial PCs, for example

ELEKTROGERÄTE RÜCKNAHME

Commercial data

Item number	2320539
Packing unit	1 pc

Minimum order quantity	1 pc
Sales key	CM21
Product key	CMUIC3
GTIN	4055626246918
Weight per piece (including packing)	1,474 g
Weight per piece (excluding packing)	1,263.26 g
Customs tariff number	85322900
Country of origin	MX

Technical data

Notes

Note on application

Note on application	As things stand now, we are preparing the product so that, as of December 11, 2027, it will comply with the requirements of the EU Cyber Resilience Act (CRA) based on the information currently available regarding the CRA.

Input data

DC operation

Input voltage	24 V DC (SELV)
Input voltage range	22.5 V DC ... 30 V DC
Fixed backup threshold	< 22 V DC
	> 30 V DC
Current consumption I_N (U_N, I_{OUT} = I_N, I_{charge} = 0)	7 A (max.)
Current consumption I_{max} (U_N, I_{OUT} = $I_{Stat.Boost}$, I_{Charge} = max)	7 A
Current consumption $I_{No\text{-}Load}$(U_N, I_{OUT} = 0, I_{charge} = 0)	0.1 A (No-load)
Current consumption I_{charge} (U_N, I_{OUT} = 0, I_{charge} = max)	0.8 A (charging process)
Power consumption P_{max} (U_N, I_{OUT} = $I_{Stat.Boost}$, I_{charge} = max)	180 W
Power consumption P_N (U_N, I_{OUT} = I_N, I_{charge} = 0)	124 W
Power consumption P_{charge} (U_N, I_{OUT} = 0, I_{charge} = max)	21.6 W
Buffer time	3 min (1 A)
	30 s (5 A)
	30 s (5 A)
Charging time	approx. 18 min
Recharging time	approx. 12 min
Inrush current	≤ 7 A (≤ ⊏⊐ ms)
Switch-on time	1 ms (buffer mode)
Internal input fuse	no
Dielectric strength	max. 35 V DC (Reverse polarity protection)
Voltage drop, input/output	0.5 V DC

Output data

Efficiency	> 97 % (with charged energy storage device)
Connection in parallel	no
Connection in series	no

Mains operation

Output voltage	24 V DC (depending on the input voltage)
Output current I_N	5 A
Static Boost ($I_{Stat.Boost}$)	6.25 A
Output power P_{OUT} (U_N, I_{OUT} = I_N)	120 W
Output power P_{OUT} (U_N, I_{OUT} = $I_{stat.Boost}$)	150 W

Power dissipation No load (U_N, I_{Out} = 0, I_{Charge} = 0)	2.5 W
Power dissipation Nominal load (U_N, I_{Out} = I_N, I_{Charge} = 0)	4 W
Short-circuit-proof	yes (with input fuse)
Idling-proof	yes

Battery operation

Output voltage	24 V DC (typical)
Output current I_N	5 A (depending on output current)
Static Boost ($I_{Stat.Boost}$)	6.25 A
Output power P_{OUT} (U_N, I_{OUT} = I_N)	120 W
Output power P_{OUT} (U_N, I_{OUT} = $I_{stat.Boost}$)	150 W
Short-circuit-proof	yes
Idling-proof	yes

Energy storage

Input

Nominal capacity	0.04 Ah

General

Capacity	4 kJ
IQ-Technology	no
Storage medium	Double-layer capacitor
Buffer time	3 min (1 A)
	30 s (5 A)
	30 s (5 A)

Connection data

Input

Position	1.x

Connection technology

Position marking	1.1 (+), 1.2 (-)

Conductor connection

Connection method	Screw connection
rigid	0.2 mm² ... 2.5 mm²
flexible	0.2 mm² ... 2.5 mm²
flexible with ferrule without plastic sleeve	0.25 mm² ... 2.5 mm²
flexible with ferrule with plastic sleeve	0.25 mm² ... 2.5 mm²
rigid (AWG)	30 ... 12
Stripping length	6.5 mm
Tightening torque (EU)	0.5 Nm ... 0.6 Nm
Drive form screw head	Slotted L

2-conductor connection

rigid	0.2 mm² ... 0.75 mm²
flexible	0.2 mm² ... 0.75 mm²
flexible with TWIN ferrule with plastic sleeve	0.5 mm² ... 1.5 mm²

Output

Position	2.x

Connection technology

Position marking	2.1 (+), 2.2 (-)

Conductor connection

Connection method	Screw connection
rigid	0.2 mm² ... 2.5 mm²
flexible	0.2 mm² ... 2.5 mm²
flexible with ferrule without plastic sleeve	0.25 mm² ... 2.5 mm²
flexible with ferrule with plastic sleeve	0.25 mm² ... 2.5 mm²
rigid (AWG)	30 ... 12
Stripping length	6.5 mm
Tightening torque (EU)	0.5 Nm ... 0.6 Nm
Drive form screw head	Slotted L

2-conductor connection

rigid	0.2 mm² ... 0.75 mm²
flexible	0.2 mm² ... 0.75 mm²
flexible with TWIN ferrule with plastic sleeve	0.5 mm² ... 1.5 mm²

Signal

Position	3.x

Conductor connection

Connection method	Push-in connection
rigid	0.2 mm² ... 1.5 mm²
flexible	0.2 mm² ... 1.5 mm²
flexible with ferrule without plastic sleeve	0.2 mm² ... 1.5 mm²
flexible with ferrule with plastic sleeve	0.2 mm² ... 0.75 mm²
rigid (AWG)	24 ... 18
Stripping length	8 mm

Interfaces

Interface	USB (Modbus/RTU)
Number of interfaces	1
Connection method	MINI-USB Type B
Position	5.x
Locking	Screw
Transmission physics	USB 2.0
Topology	Point-to-point
Transmission speed	9600 baud

Transmission length	max. 5 m
Access time	≤ 2 s
Chipset	Silicon Labs CP2104-F03-GM
Electrical isolation	Yes, UL approved

Signaling

Signal state Remote

Connection labeling	3.5
Channel	DI (digital input)
State (configurable)	Remote
State condition	Remote
Low signal	<3 kΩ to SGnd
High signal	open (>470 kΩ between Remote and SGnd)
Signal - state assignment	low - active
Reference potential	3.6 (SGnd, identical to 1.2, 2.2)

Signal state Alarm

Connection labeling	3.3
Channel	DO (digital output)
Switching output	Transistor
State (configurable)	Group alarm
State condition (configurable)	Alarm
Output voltage	24 V (U_N - 1 V (typical))
Output can be loaded	max. 20 mA
State - signal assignment	active - low
Reference potential	3.6 (SGnd, identical to 1.2, 2.2)
LED status indicator	red (Alarm)

Signal state UIN OK

Connection labeling	3.1, 3.2
Channel	DO (digital output)
Switching output	Electronic relays (OptoMOS)
State (configurable)	U_{In} OK
State condition (configurable)	U_{In} > 22,5 V DC, U_{In} < 30 V DC
Output voltage	max. 30 V
Output can be loaded	300 mA
State - signal assignment	active - high
LED status indicator	green (U_{In} OK)

Signal state Ready

Connection labeling	3.4
Channel	DO (digital output)
Switching output	Transistor
State (configurable)	Ready
State condition (configurable)	State of charge = 100% or buffer mode

Output voltage	24 V (U_N - 1 V (typical))
Output can be loaded	max. 20 mA
State - signal assignment	active - high
Reference potential	3.6 (SGnd, identical to 1.2, 2.2)
LED status indicator	Green (state of charge - SOC)

Signal ground SGnd

Connection labeling	3.6
Switching voltage	0 V
Current carrying capacity	max. 60 mA
Function	Signal ground
Reference potential	3.3 Alarm, 3.4 Ready, 3.5 Remote

Electrical properties

Insulation voltage input, output / housing	500 V

Product properties

Product type	DC UPS with integrated capacitor
Product family	QUINT DC UPS with integrated capacitor
MTBF (IEC 61709, SN 29500)	1900327 h (25 °C)
	1301923 h (40 °C)
	673204 h (60 °C)
Special properties	The product is being prepared for compliance with the Cyber Resilience Act (CRA)

Insulation characteristics

Protection class	III (SELV)
Overvoltage category (UL 60950-1)	II
Degree of pollution	2

Life expectancy (electrolytic capacitors)

Time	87088 h

Dimensions

Item dimensions

Width	94 mm
Height	130 mm
Depth	125 mm

Installation dimensions

Installation distance right/left	0 mm / 0 mm
Installation distance top/bottom	50 mm / 50 mm

Mounting

Mounting type	DIN rail mounting
Assembly note	alignable: horizontally 0 mm, vertically 50 mm

Mounting position	horizontal DIN rail NS 35, EN 60715

Material specifications

Flammability rating according to UL 94 (housing / terminal blocks)	V0
Housing material	Metal

Environmental and real-life conditions

Ambient conditions

Degree of protection	IP20
Ambient temperature (operation)	-25 °C ... 60 °C (> 40 °C Derating: 1 %/K)
Ambient temperature (storage/transport)	-40 °C ... 70 °C
Ambient temperature (start-up type tested)	-40 °C
Maximum altitude	≤ 4000 m
Climatic class	3K3 (in acc. with EN 60721)
Max. permissible relative humidity (operation)	≤ 95 %
Shock	30g, 18 ms per spatial direction (in accordance with IEC 60068-2-27)
Vibration (operation)	0,7g

Standards and regulations

Protective extra-low voltage

Standard designation	Protective extra-low voltage
Standards/specifications	UL 61010-2-201

Approvals

UL

Identification	UL/C-UL Listed UL 508

UL

Identification	UL/C-UL Recognized UL 60950-1

UL

Identification	UL ANSI/ISA-12.12.01 Class I, Division 2, Groups A, B, C, D (Hazardous Location)

UL

Identification	CAN/CSA-C22.2 No. 107.1-01

CB scheme

Identification	UL 60950-1

EMC data

Electromagnetic compatibility	Conformance with EMC Directive 2014/30/EU
Low Voltage Directive	Conformance with Low Voltage Directive 2014/35/EC
EMC requirements for noise emission	EN 61000-6-3

	EN 61000-6-4
EMC requirements for noise immunity	EN 61000-6-1
	EN 61000-6-2

Noise emission

Standards/regulations	EN 55016
	EN 61000-6-3

Electrostatic discharge

Standards/regulations	EN 61000-4-2

Electrostatic discharge

Contact discharge	6 kV (Test Level 3)
Discharge in air	8 kV (Test Level 3)
Comments	Criterion B

Electromagnetic HF field

Standards/regulations	EN 61000-4-3

Electromagnetic HF field

Frequency range	80 MHz ... 6 GHz
Test field strength	10 V/m
Comments	Criterion A

Fast transients (burst)

Standards/regulations	EN 61000-4-4

Fast transients (burst)

Input	2 kV (Test Level 3 - asymmetrical)
Output	2 kV (Test Level 3 - asymmetrical)
Signal	2 kV (Test Level 3 - asymmetrical)
Comments	Criterion B

Surge voltage load (surge)

Standards/regulations	EN 61000-4-5

Surge voltage load (surge)

Input/Output	1 kV (Test Level 2 - symmetrical)
	2 kV (Test Level 3 - asymmetrical)
Signal	1 kV (Test Level 2 - asymmetrical)
Comments	Criterion B
Input/Output	1 kV (Test Level 2 - symmetrical)
	2 kV (Test Level 3 - asymmetrical)

Conducted interference

Standards/regulations	EN 61000-4-6

Conducted interference

Frequency range	0.15 MHz ... 80 MHz

Comments	Criterion A
Voltage	10 V

Criteria

Criterion A	Normal operating behavior within the specified limits.
Criterion B	Temporary impairment to operational behavior that is corrected by the device itself.

QUINT4-CAP/24DC/5/4KJ - DC UPS with integrated capacity

2320539

https://www.phoenixcontact.com/us/products/2320539

Drawings

Block diagram

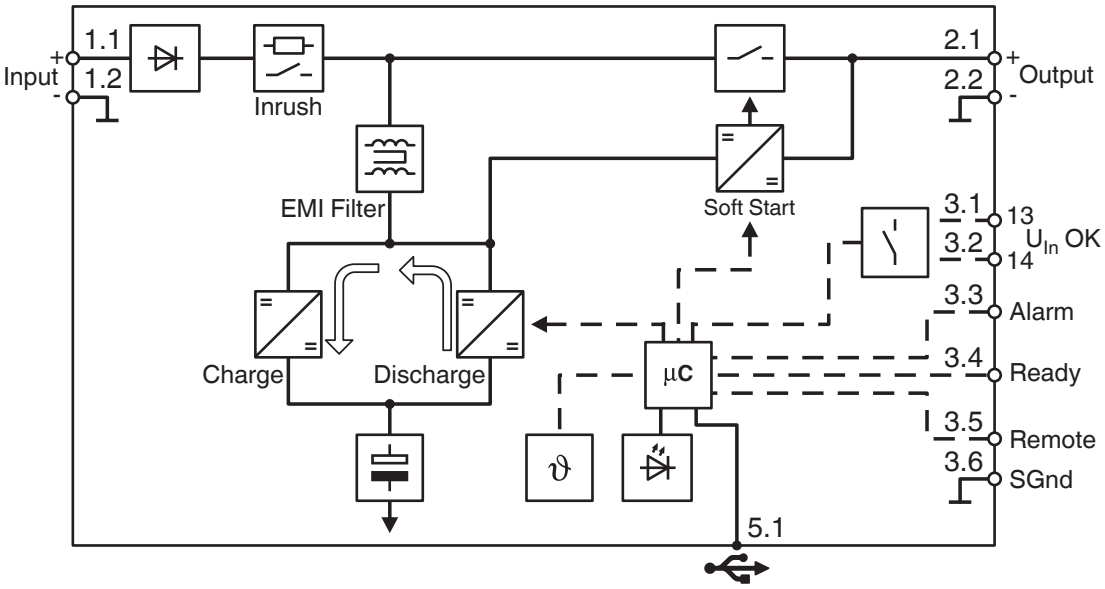

Graphic

Load Current	Buffertime																
	Seconds							Minutes									
	9	10	15	20	30	40	50	1	2	3	5	10	20	30	40	50	60
0.05 A																	
0.50 A																	
1.00 A																	
2.00 A																	
2.50 A																	
3.80 A																	
5.00 A																	
6.25 A																	
7.50 A																	
10.0 A																	
12.5 A																	
15.0 A																	
20.0 A																	
25.0 A																	

The data is based on an ambient temperature of +25 °C.

2320526 QUINT4-CAP/24DC/3.8/1KJ/PT

2320571 QUINT4-CAP/24DC/10/8KJ/PT

2320539 QUINT4-CAP/24DC/5/4KJ/PT

QUINT4-CAP/24DC/20/16KJ/...

QUINT CAP buffer times

Approvals

To download certificates, visit the product detail page: https://www.phoenixcontact.com/us/products/2320539

cUL Recognized
Approval ID: E211944

UL Recognized
Approval ID: E211944

EAC
Approval ID: RU S-DE.BL08.W.00764

EAC
Approval ID: RU*DE*HB54.B05799/20

IECEE CB Scheme
Approval ID: DE/PTZ/0063

cULus Listed
Approval ID: 20180112-E123528

cUL Listed
Approval ID: E199827

UL Listed
Approval ID: E199827

Classifications

ECLASS

ECLASS-13.0	27040705
ECLASS-15.0	27040705

ETIM

ETIM 10.0	EC000382

UNSPSC

UNSPSC 21.0	26111700

Environmental product compliance

EU RoHS

Fulfills EU RoHS substance requirements	Yes
Exemption	6(c), 7(a), 7(c)-I

China RoHS

Environment friendly use period (EFUP)	EFUP-25
	An article-related China RoHS declaration table can be found in the download area for the respective article under "Manufacturer declaration". For all articles with EFUP-E, no China RoHS declaration table issued and required.

EU REACH SVHC

REACH candidate substance (CAS No.)	Diboron trioxide(CAS: 1303-86-2)
	Lead monoxide (lead oxide)(CAS: 1317-36-8)
	Lead(CAS: 7439-92-1)
SCIP	5ed903a5-5f72-4a25-8115-b43256e9e1eb

Phoenix Contact 2026 © - all rights reserved
https://www.phoenixcontact.com

Phoenix Contact USA
586 Fulling Mill Road
Middletown, PA 17057, United States
(+717) 944-1300
info@phoenixcon.com