QUINT-UPS/ 24DC/ 24DC/20 - Uninterruptible power supply

2320238

https://www.phoenixcontact.com/us/products/2320238

Please be informed that the data shown in this PDF document is generated from our online catalog. Please find the complete data in the user documentation. Our general terms of use for downloads are valid.

CRA-READY



Uninterruptible power supply with IQ Technology for DIN rail mounting, input: 24 V DC, output: 24 V DC/20 A, includes mounted UTA 107/30 universal DIN rail adapter. Product is being prepared for compliance with the Cyber Resilience Act (CRA).

Product description

The UPS module for 24 V DC with output currents ranging from 5 to 40 A allows you to create a custom solution combining a power supply, UPS module, and energy storage.

Your advantages

- Easy handling thanks to automatic battery detection, tool-free battery replacement during operation, and communication via the IFS interface
- Optimum use of the buffer time and preventive monitoring of the energy storage
- Rapid battery charging
- Comprehensive signaling and parameterization
- Fast tripping of standard miniature circuit breakers with SFB (selective fuse breaking) technology
- Reliable starting of difficult loads with the static POWER BOOST power reserve with up to 1.5 times the nominal current permanently

ELEKTROGERÄTE RÜCKNAHME

Commercial data

Item number	2320238

Packing unit	1 pc
Minimum order quantity	1 pc
Sales key	CM20
Product key	CMUQ43
GTIN	4046356554190
Weight per piece (including packing)	812 g
Weight per piece (excluding packing)	601 g
Customs tariff number	85371091
Country of origin	IN

Technical data

Notes

Note on application

Note on application	As things stand now, we are preparing the product so that, as of December 11, 2027, it will comply with the requirements of the EU Cyber Resilience Act (CRA) based on the information currently available regarding the CRA.

Input data

DC operation

Input voltage	24 V DC
Nominal input voltage range	24 V DC
Input voltage range	18 V DC ... 30 V DC
Input voltage range DC	18 V DC ... 30 V DC
Voltage type of supply voltage	DC
Buffer period	1 h (With battery module 38 AH)
Current consumption	32.9 A (maximum, mains operation)
	10.5 mA (No load, mains operation)
	6.9 A (Charging, mains operation)
Fixed backup threshold	≤ 22 V DC
Variable connect threshold	1 V/0.1 s

Output data

Efficiency	> 98 % (Mains operation, with charged energy storage)
	98 % (Battery operation)
Nominal output voltage	24 V DC
Output voltage range	18 V DC ... 30 V DC
Nominal output current (I_N)	20 A (-25 °C ... 50 °C)
Output current limit	In mains mode according to connected upstream current limiting device
	> 27 A (Battery operation)
Derating	60 °C ... 70 °C (2.5 %/K)
	60 °C ... 70 °C (2.5 %/K)
Output power	480 W
Power dissipation	2.7 W (Mains operation)
	7.65 W (Mains operation)
	3.19 W (Battery operation)
	9.35 W (Battery operation)
Connection in parallel	yes, up to 2 modules with redundancy module
	2 (Devices)
Connection in series	no
	no

Mains operation

Nominal output voltage	24 V DC
Output voltage range	18 V DC ... 30 V DC
Nominal output current (I_N)	20 A (-25 °C ... 60 °C)
POWER BOOST (I_{Boost})	26 A (-25 °C ... 40 °C)
Selective Fuse Breaking (I_{SFB})	120 A (-25 °C ... 60 °C)
Duration	12 ms (SFB technology)

Battery operation

Nominal output voltage	24 V DC
Output voltage range	19.2 V DC ... 27.6 V DC (U_{OUT} = U_{BAT} - 0,5 V DC)
Nominal output current (I_N)	20 A (-25 °C ... 60 °C)
POWER BOOST (I_{Boost})	27 A (-25 °C ... 40 °C)
Selective Fuse Breaking (I_{SFB})	120 A (-25 °C ... 60 °C)
Duration	15 ms (SFB technology)

Signal: Alarm

Output description	Relay (floating)
Maximum switching voltage	≤ 30 V AC/DC
Continuous load current	≤ 100 mA

Signal: Battery charge

Output description	Relay (floating)
Maximum switching voltage	≤ 30 V AC/DC
Output voltage	24 V
Continuous load current	≤ 100 mA

Signal: Battery mode

Output description	Relay (floating)
Maximum switching voltage	≤ 30 V AC/DC
Output voltage	24 V
Continuous load current	≤ 100 mA

Energy storage

Nominal voltage U_N	24 V DC
End-of-charge voltage	24 V DC ... 29 V DC (temperature compensated)
Charging current	0.2 A ... 5 A
Nominal capacity range	3 Ah ... 200 Ah
Battery presence check (cyclic)	60 s
IQ technology	Yes
Temperature compensation	42 mV/K (preset)
Temperature compensation (preset)	42 mV/K
Network management	Yes

Connection data

Input

Connection method	Screw connection
Conductor cross-section, rigid min.	0.2 mm²
Conductor cross-section, rigid max.	6 mm²
Conductor cross-section flexible min.	0.2 mm²
Conductor cross-section flexible max.	4 mm²
Conductor cross-section AWG min.	12
Conductor cross-section AWG max.	10
Stripping length	8 mm
Screw thread	M4
Tightening torque, min	0.5 Nm
Tightening torque max	0.6 Nm

Output

Connection method	Screw connection
Conductor cross-section, rigid min.	0.2 mm²
Conductor cross-section, rigid max.	6 mm²
Conductor cross-section flexible min.	0.2 mm²
Conductor cross-section flexible max.	4 mm²
Conductor cross-section AWG min.	12
Conductor cross-section AWG max.	10
Stripping length	8 mm
Screw thread	M4
Tightening torque, min	0.5 Nm
Tightening torque max	0.6 Nm

Signal

Conductor cross-section, rigid min.	0.2 mm²
Conductor cross-section, rigid max.	4 mm²
Conductor cross-section flexible min.	0.2 mm²
Conductor cross-section flexible max.	2.5 mm²
Conductor cross-section AWG min.	24
Conductor cross-section AWG max.	12
Screw thread	M4
Tightening torque, min	0.5 Nm
Tightening torque max	0.6 Nm

Interfaces

Interface	IFS (Interface system data port)

Signaling

Types of signaling	LED
	Relay contact
	Interface/software

Signal output

Signalization designation	Power In OK
Status display	LED
Note on status display	static on
	static on

Signal output: Switching output

Signalization designation	Alarm
Status display	LED
Note on status display	static on
Color	red
Note on status display	static on

Signal output: Switching output

Signalization designation	Battery charge
Status display	LED bar graph
Note on status display	dynamic
Color	green/red
Note on status display	dynamic

Signal output: Switching output

Signalization designation	Battery mode
Status display	LED
Note on status display	static on
Color	yellow
Note on status display	static on

Electrical properties

Insulation voltage input/output	500 V DC
Insulation voltage input, output / housing	750 V DC

Product properties

Product type	DC UPS
Product family	QUINT DC UPS
IQ technology	Yes
MTBF (IEC 61709, SN 29500)	> 500000 h (40 °C)

Insulation characteristics

Protection class	III

Life expectancy (electrolytic capacitors)

Time	195013 h

Dimensions

Width	40 mm
Height	130 mm

Depth	125 mm

Installation dimensions

Installation distance right/left	5 mm / 5 mm
Installation distance top/bottom	50 mm / 50 mm

Alternative assembly

Width	123 mm
Height	130 mm
Depth	43 mm

Mounting

Mounting type	DIN rail mounting
Assembly note	alignable: horizontal 5 mm, vertical 50 mm
Mounting position	horizontal DIN rail NS 35, EN 60715

Material specifications

Housing material	Metal
Housing material	Steel sheet, zinc-plated
Type of housing	Aluminum (AlMg3)
Hood version	Galvanized sheet steel, free from chrome (VI)

Environmental and real-life conditions

Ambient conditions

Degree of protection	IP20
Ambient temperature (operation)	-25 °C ... 70 °C
Ambient temperature (storage/transport)	-40 °C ... 85 °C
Climatic class	3K3 (in acc. with EN 60721)
Max. permissible relative humidity (operation)	≤ 95 % (25 °C, non-condensing)
Shock	18 ms, 30g, in each space direction (according to IEC 60068-2-27)
Vibration (operation)	< 15 Hz, amplitude ±2.5 mm (according to IEC 60068-2-6)
	15 Hz ... 150 Hz, 2.3g t_v = 90 min.

Standards and regulations

Rail applications	EN 50121-4
Standard – Electronic equipment for use in electrical power installations and their assembly into electrical power installations	EN 50178/VDE 0160 (PELV)
Standard - Electrical safety	EN 60950-1/VDE 0805 (SELV)

Approvals

UL approvals	UL Listed UL 508
	UL/C-UL Recognized UL 60950-1
	UL ANSI/ISA-12.12.01 Class I, Division 2, Groups A, B, C, D (Hazardous Location)

EMC data

Electromagnetic compatibility	Conformance with EMC Directive 2014/30/EU
Low Voltage Directive	Conformance with Low Voltage Directive 2014/35/EC
EMC requirements for noise emission	EN 61000-6-3
	EN 61000-6-4
EMC requirements for noise immunity	EN 61000-6-1
	EN 61000-6-2

Electrostatic discharge

Standards/regulations	EN 61000-4-2

Electrostatic discharge

Contact discharge	8 kV (Test Level 4)
Discharge in air	15 kV (Test Level 4)
Comments	Criterion A

Electromagnetic HF field

Standards/regulations	EN 61000-4-3

Electromagnetic HF field

Frequency range	80 MHz ... 1 GHz
Test field strength	20 V/m
Frequency range	1 GHz ... 3 GHz
Test field strength	10 V/m
Frequency range	2 GHz ... 3 GHz
Test field strength	3 V/m
Comments	Criterion A

Fast transients (burst)

Standards/regulations	EN 61000-4-4

Fast transients (burst)

Input	2 kV (Test Level 3 - asymmetrical)
Output	2 kV (Test Level 3 - asymmetrical)
Signal	2 kV (Test Level 4 - asymmetrical)
Comments	Criterion A

Surge voltage load (surge)

Standards/regulations	EN 61000-4-5

Surge voltage load (surge)

Input	1 kV (Test Level 2 - symmetrical)
	2 kV (Test Level 3 - asymmetrical)
Output	1 kV (Test Level 2 - symmetrical)
	2 kV (Test Level 3 - asymmetrical)
Signal	1 kV (Test Level 2 - asymmetrical)
Comments	Criterion A

Conducted interference

Standards/regulations	EN 61000-4-6

Conducted interference

Input/output/signal	asymmetrical
Frequency range	0.15 MHz ... 80 MHz
Comments	Criterion A
Voltage	10 V (Test Level 3)

Emitted interference

Standards/regulations	EN 61000-6-3
Radio interference voltage in acc. with EN 55011	EN 55011 (EN 55022) Class B, area of application: Industry and residential
Emitted radio interference in acc. with EN 55011	EN 55011 (EN 55022) Class B, area of application: Industry and residential

Criteria

Criterion A	Normal operating behavior within the specified limits.
Criterion B	Temporary impairment to operational behavior that is corrected by the device itself.

Drawings

Block diagram

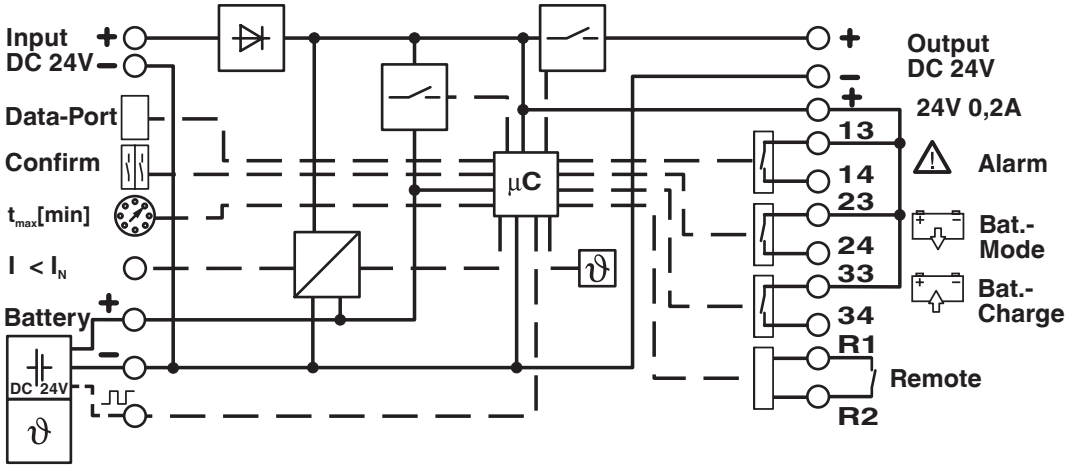

Graphic

Load Current	Buffertime																												
	Minutes															Hours													
	1	2	3	4	5	6	7	8	9	10	20	30	40	45	50	1	2	3	4	5	6	7	8	9	10	12	14	16	18	20	50	100
1 A																														2x		
2 A																														2x		
3 A																												2x	2x	2x		
5 A																							2x	2x	2x	2x	2x	2x				
7 A																				2x	2x	2x	2x	2x	2x							
10 A																			2x	2x	2x	2x	2x									
15 A																	2x	2x	2x													
20 A																	2x	2x														
25 A																	2x															
30 A																2x																
35 A														2x	2x	2x																
40 A													2x	2x	2x	2x																

2x: In this case, two battery modules of the same capacity are required. The data is based on an ambient temperature of +25 °C at the start of use.

1274520 UPS-BAT/PB/24DC/1.2AH
1274119 UPS-BAT/PB/24DC/12AH
1474660 UPS-BAT/PB/24DC/110AH
1274117 UPS-BAT/PB/24DC/4AH
1348516 UPS-BAT/PB/24DC/20AH
1274118 UPS-BAT/PB/24DC/7AH
1354641 UPS-BAT/PB/24DC/40AH

QUINT DC UPS buffer times for PB battery module

Graphic

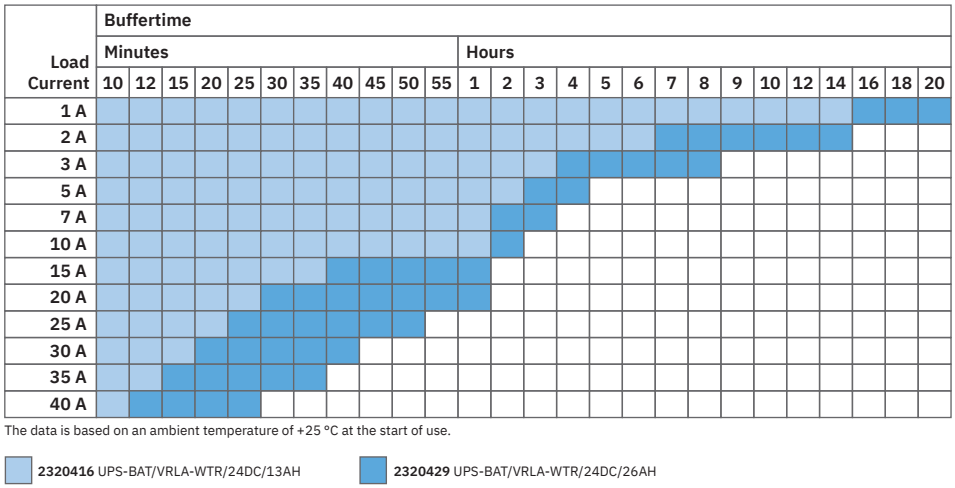

QUINT DC UPS buffer times and VRLA-WTR battery module

Approvals

To download certificates, visit the product detail page: https://www.phoenixcontact.com/us/products/2320238

cUL Recognized
Approval ID: E211944

UL Recognized
Approval ID: E211944

EAC
Approval ID: RU S-DE.BL08.W.00764

LR
Approval ID: LR22136091TA

BV
Approval ID: 41516/B0 BV

EAC
Approval ID: RU-DE.B.00184/20

UL Listed
Approval ID: E123528

cUL Listed
Approval ID: FILE E 123528

ABS
Approval ID: 22-2244289-PDA

DNV
Approval ID: TAA0000265

	Nominal voltage U_N	Nominal current I_N	Cross section AWG	Cross section mm^2
keine				
	500 V	41 A	-	- 6

KC
Approval ID: R-R-PCK-2320238

IECEE CB Scheme
Approval ID: DE/PTZ/0049

cUL Listed
Approval ID: E199827

UL Listed
Approval ID: E199827

Classifications

ECLASS

ECLASS-13.0	27040705
ECLASS-15.0	27040705

ETIM

ETIM 10.0	EC000382

UNSPSC

UNSPSC 21.0	39121000

Environmental product compliance

EU RoHS

Fulfills EU RoHS substance requirements	Yes
Exemption	7(a), 7(c)-I

China RoHS

Environment friendly use period (EFUP)	EFUP-25
	An article-related China RoHS declaration table can be found in the download area for the respective article under "Manufacturer declaration". For all articles with EFUP-E, no China RoHS declaration table issued and required.

EU REACH SVHC

REACH candidate substance (CAS No.)	Lead(CAS: 7439-92-1)
SCIP	3d2e4de9-bb88-463d-a2ac-33bbcaf2a571

EF3.1 Climate Change

CO2e kg	22.718 kg CO2e

Phoenix Contact 2026 © - all rights reserved
https://www.phoenixcontact.com

Phoenix Contact USA
586 Fulling Mill Road
Middletown, PA 17057, United States
(+717) 944-1300
info@phoenixcon.com