AXL P FBPS 28DC/0.5A - Feed-in module

2316394

https://www.phoenixcontact.com/us/products/2316394

Please be informed that the data shown in this PDF document is generated from our online catalog. Please find the complete data in the user documentation. Our general terms of use for downloads are valid.



Axioline P redundant power supply plug for the PROFIBUS PA power supply base. Provides 500 mA @ 28 V DC to Fieldbus couplers along the trunk.

Product description

The AXL P FBPS 28DC/0.5A is a redundant, 500 mA PROFIBUS PA power supply plug with integrated PROFIBUS PA diagnostics and load sharing capabilities.

ELEKTROGERÄTE RÜCKNAHME

Commercial data

Item number	2316394
Packing unit	1 pc
Minimum order quantity	1 pc
Sales key	DR06
Product key	DRIP53
GTIN	4055626368368
Weight per piece (including packing)	147.7 g
Weight per piece (excluding packing)	120 g
Customs tariff number	85044083
Country of origin	US

Technical data

Notes

Note on application

Note on application	Only for industrial use

Utilization restriction

CCCex note	Use in potentially explosive areas is not permitted in China.

Input data

Input voltage	24 V DC
Nominal input voltage range	18.5 V DC ... 30.5 V DC
Input voltage range DC	18.5 V DC ... 30.5 V DC
Short-term input voltage	24 V DC
Current consumption	max. 1.35 A

Output data

Output voltage range	28 V DC ... 30 V DC (on the trunk)
Power dissipation	2.5 W (typical)
Connection in parallel	yes, for redundancy
Connection in series	no

Electrical properties

Maximum power dissipation for nominal condition	6 W

Product properties

Product type	Power supply
Product family	Axioline P

Insulation characteristics

Overvoltage category	II
Degree of pollution	2

Dimensions

Dimensional drawing	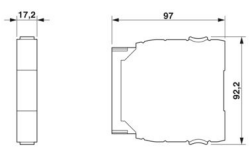
Width	17 mm
Height	92 mm
Depth	97 mm

Mounting

Mounting type	DIN rail mounting
Assembly note	Plug-in connections may only be operated only when there is no load/voltage.

Material specifications

Color (Housing)	gray (RAL 7042)

Environmental and real-life conditions

Ambient conditions

Degree of protection	IP20
Ambient temperature (operation)	-40 °C ... 70 °C
Ambient temperature (storage/transport)	-40 °C ... 85 °C
Maximum altitude	2000 m
Permissible humidity (operation)	5 % ... 95 %
Shock	15g
Vibration (operation)	2g

Standards and regulations

Standards/specifications	Ring wave noise immunity in acc. with IEC 61000-4-12
Standard designation	PROFIBUS standardization
Standards/specifications	IEC 61158-2

Approvals

ATEX CE

Identification	Ⓔx II 3 G Ex ec IIC T4 Gc
Certificate	UL 26 ATEX 3563X

IECEx

Identification	Ex ec IIC T4 Gc
Certificate	IECEx UL 26.0041X

Ex data

UL, USA / Canada	Class I, Div. 2, Groups A, B, C, D T4 Class I, Zone 2, IIC T4

Drawings

Dimensional drawing

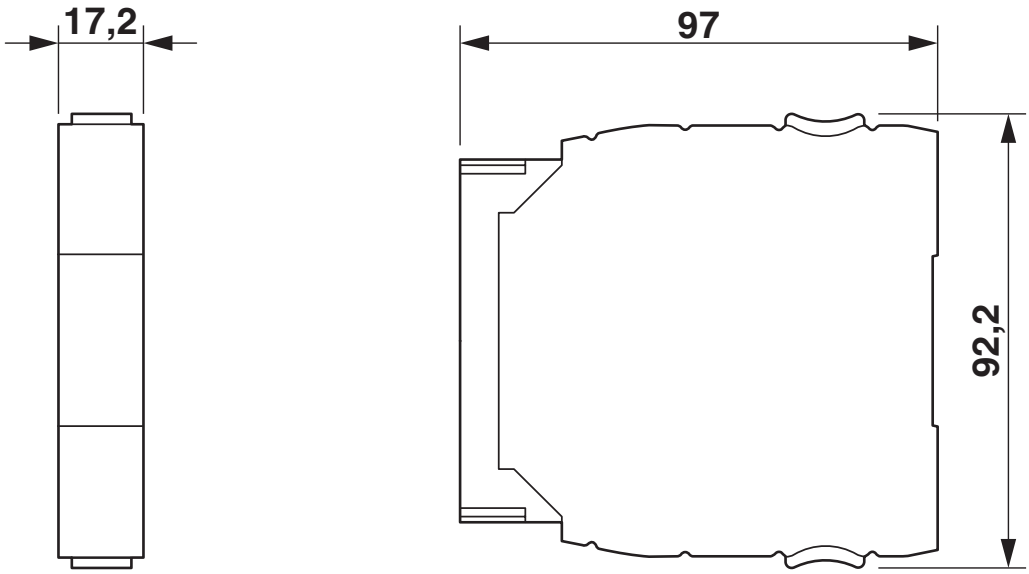

Application drawing

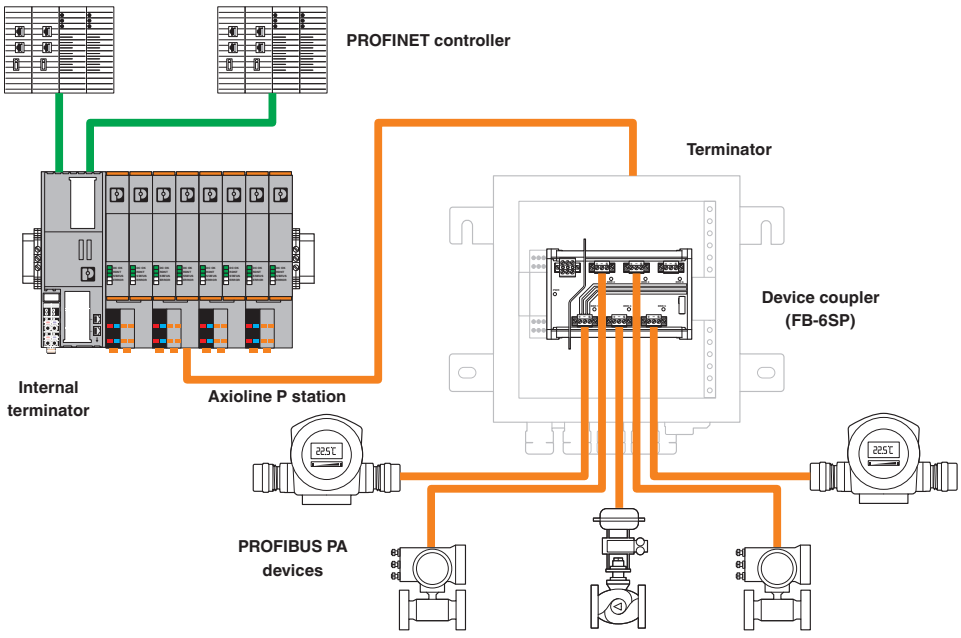

Application drawing

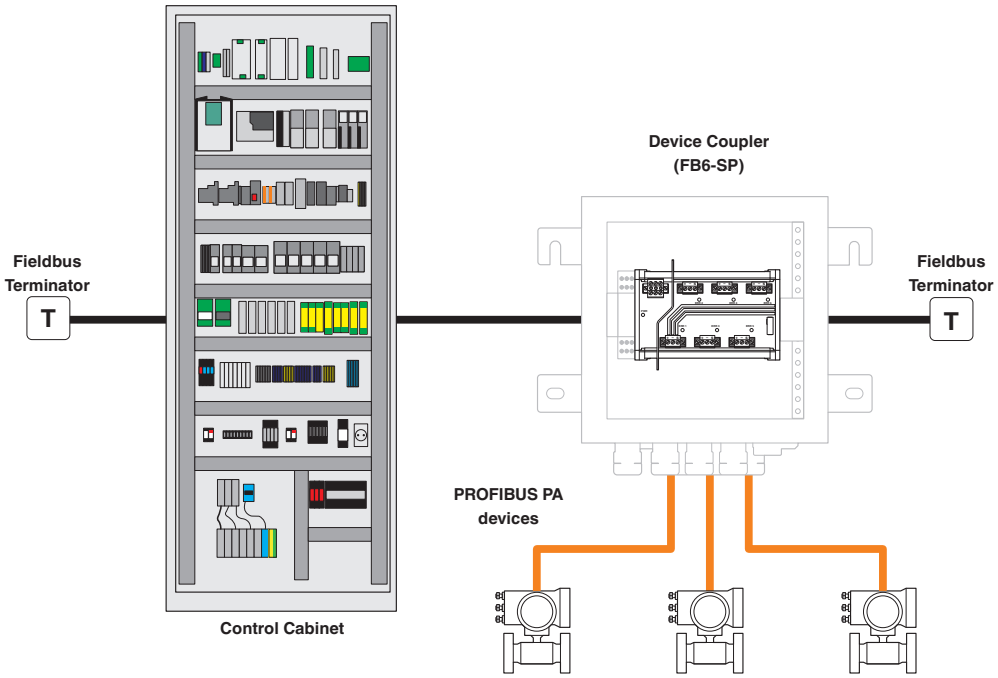

Block diagram

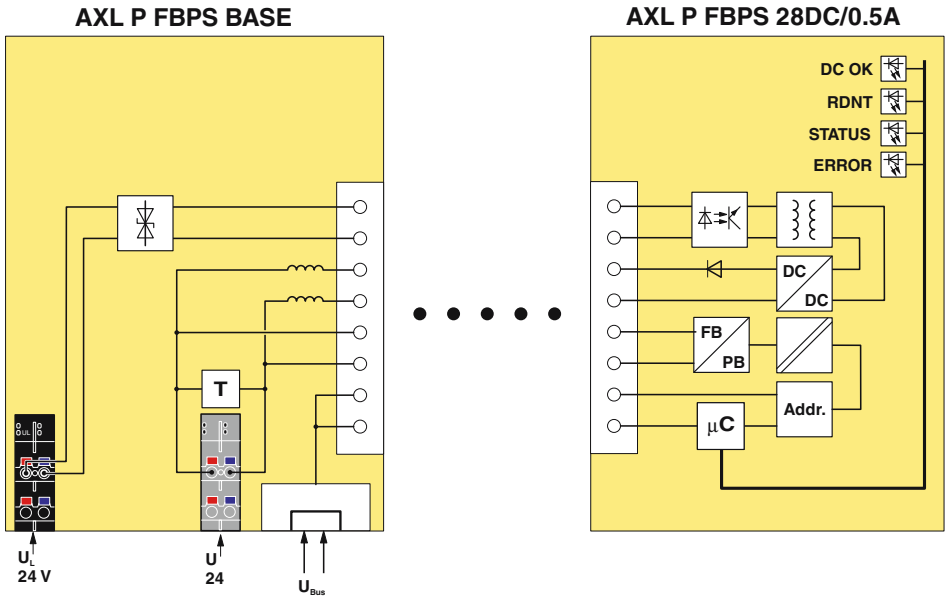

Approvals

To download certificates, visit the product detail page: https://www.phoenixcontact.com/us/products/2316394

cULus Listed
Approval ID: E238705

IECEx
Approval ID: IECEx IBE 18.0023X

cUL Listed
Approval ID: E196811

UL Listed
Approval ID: E196811

ATEX
Approval ID: IBExU 18 ATEX B018 X

CCC
Approval ID: 2021122303114874

cULus Listed
Approval ID: E196811

Classifications

ECLASS

ECLASS-13.0	27242611
ECLASS-15.0	27242611

ETIM

ETIM 10.0	EC002583

UNSPSC

UNSPSC 21.0	32151600

Environmental product compliance

EU RoHS

Fulfills EU RoHS substance requirements	Yes
Exemption	7(a), 7(c)-I

China RoHS

Environment friendly use period (EFUP)	EFUP-25
	An article-related China RoHS declaration table can be found in the download area for the respective article under "Manufacturer declaration". For all articles with EFUP-E, no China RoHS declaration table issued and required.

EU REACH SVHC

REACH candidate substance (CAS No.)	Lead(CAS: 7439-92-1)
SCIP	6e4ed1d7-7065-488f-8efa-bd5f3dd39d61

Phoenix Contact 2026 © - all rights reserved
https://www.phoenixcontact.com

Phoenix Contact USA
586 Fulling Mill Road
Middletown, PA 17057, United States
(+717) 944-1300
info@phoenixcon.com