# PLC-V8/FLK14/OUT - System connection

2295554

https://www.phoenixcontact.com/us/products/2295554

Please be informed that the data shown in this PDF document is generated from our online catalog. Please find the complete data in the user documentation. Our general terms of use for downloads are valid.



V8 adapter for 8 x PLC-INTERFACE (6.2 mm), controller: PLC system cabling of output cards, connection 1: IDC/FLK pin strip 1x 14-position, connection 2: Plug-in connection (Can be snapped onto 8x PLC-INTERFACE terminals), connection 3: Screw connection 1x 2-position, number of channels: 8, control logic: positive switching

## Commercial data

| | |
|---|---|
| Item number | 2295554 |
| Packing unit | 1 pc |
| Minimum order quantity | 1 pc |
| Sales key | C421 |
| Product key | DK21D1 |
| GTIN | 4017918189143 |
| Weight per piece (including packing) | 106.7 g |
| Weight per piece (excluding packing) | 106 g |
| Customs tariff number | 85366990 |
| Country of origin | DE |

## Technical data

### Product properties

| | |
|---|---|
| Product type | Interface module |
| Product family | PLC-INTERFACE |
| Number of positions | 14 |
| No. of channels | 8 |

Insulation characteristics: Air clearances and creepage distances

| | |
|---|---|
| Insulation | Functional insulation |
| Overvoltage category | II |
| Pollution degree | 2 |

### Electrical properties

| | |
|---|---|
| Operating voltage range | 18 V DC ... 33.6 V DC |
| Current (per branch) | ≤ 1 A |
| Current (Power supply) | ≤ 3 A |

Air clearances and creepage distances

| | |
|---|---|
| Rated insulation voltage | 50 V |
| Rated surge voltage | 0.5 kV (1.2/50 µs) |

Supported controller: SIEMENS S7-1500

| | |
|---|---|
| Suitable I/O card | 6ES7522-1BH00-0AB0 |
| | 6ES7522-1BH01-0AB0 |
| | 6ES7522-1BL00-0AB0 |
| | 6ES7522-1BL01-0AB0 |

Supported controller: SIEMENS S7-400

| | |
|---|---|
| Suitable I/O card | 6ES7422-1BL00-0AA0 |
| | 6ES7422-7BL00-0AB0 |

Supported controller: ALLEN-BRADLEY ControlLogix

| | |
|---|---|
| Suitable I/O card | 1756-OB32 |
| | 1756-OB16E |

Supported controller: ALLEN-BRADLEY PLC 5

| | |
|---|---|
| Suitable I/O card | 1771 OBN |

Supported controller: ALLEN-BRADLEY SLC 500

| | |
|---|---|
| Suitable I/O card | 1746 OB 32 |

Supported controller: HONEYWELL Experion PKS C200

| | |
|---|---|
| Suitable I/O card | TC-ODD 321 |

Supported controller: MITSUBISHI MELSEC Q

| | |
|---|---|
| Suitable I/O card | QY81P |

| | |
|---|---|
| | QY82P |

Supported controller: SIEMENS S7-300 / ET 200 M

| | |
|---|---|
| Suitable I/O card | CPU 313C-2DP |
| | CPU 314C-2DP |
| | CPU 314C-2PtP |
| | 6ES7322-1BH01-0AA0 |
| | 6ES7322-1BL00-0AA0 |
| | 6ES7323-1BH01-0AA0 |
| | 6ES7323-1BL00-0AA0 |
| | CPU 313C |
| | CPU 313C-2PtP |

Supported controller: ABB S800 I/O

| | |
|---|---|
| Suitable I/O card | DO810 |
| | DO840 |

Supported controller: EMERSON DeltaV

| | |
|---|---|
| Suitable I/O card | VE4002S1T1B3 |
| | VE4002S1T2B3 |
| | VE4002S1T2B3 Series 2 |
| | VE4002S1T2B6 |

Supported controller: GE-FANUC RX3i

| | |
|---|---|
| Suitable I/O card | IC694MDL754 |

Supported controller: MITSUBISHI MELSEC L

| | |
|---|---|
| Suitable I/O card | LY41PT1P |
| | LY42PT1P |

## Connection data

Connection 1 (control level)

| | |
|---|---|
| Connection in acc. with standard | IEC 60603-13 |
| Connection method | IDC/FLK pin strip |
| Number of connections | 1 |
| Number of positions | 14 |
| Insertion/withdrawal cycles | > 50 |
| Pitch | 2.54 mm |

Connection 2 (field level)

| | |
|---|---|
| Connection method | Plug-in connection |
| Note | Can be snapped onto 8x PLC-INTERFACE terminals |

Connection 3 (supply)

| | |
|---|---|
| Connection method | Screw connection |
| Stripping length | 8 mm |
| Screw thread | M3 |

| | |
|---|---|
| Number of connections | 1 |
| Number of positions | 2 |
| Conductor cross-section rigid | 0.2 mm² ... 4 mm² |
| Conductor cross-section rigid (2 conductors with same cross section) | 0.2 mm² ... 1.5 mm² |
| Conductor cross-section flexible | 0.2 mm² ... 2.5 mm² |
| | 0.25 mm² ... 2.5 mm² (Ferrule without plastic sleeve) |
| | 0.25 mm² ... 2.5 mm² (Ferrule with plastic sleeve) |
| Conductor cross-section flexible (2 conductors with same cross section) | 0.2 mm² ... 1.5 mm² |
| | 0.25 mm² ... 0.75 mm² (Ferrule without plastic sleeve) |
| | 0.5 mm² ... 1.5 mm² (TWIN ferrule with plastic sleeve) |
| Conductor cross-section AWG | 24 ... 12 |
| Tightening torque | 0.5 Nm ... 0.6 Nm |
| Pitch | 5 mm |

## Signaling

| | |
|---|---|
| Status display present | yes |
| Operating voltage display | Green LED |

## Dimensions

Item dimensions

| | |
|---|---|
| Width | 49.93 mm |
| Height | 41 mm |
| Depth | 55.8 mm |

## Material specifications

| | |
|---|---|
| Color | gray (RAL 7042) |
| Flammability rating according to UL 94 | V0 |
| Housing insulation material | Polyamide 6.6 green |

## Environmental and real-life conditions

Ambient conditions

| | |
|---|---|
| Degree of protection (Module) | IP20 |
| Degree of protection (Installation location) | ≥ IP54 |
| Ambient temperature (operation) | -40 °C ... 70 °C |
| Ambient temperature (storage/transport) | -40 °C ... 70 °C |
| Altitude | ≤ 2000 m |

## Approvals

CE

| | |
|---|---|
| Certificate | CE-compliant |

UKCA

| | |
|---|---|
| Certificate | UKCA-compliant |

UL, USA/Canada

| | |
|---|---|
| Identification | Class I, Div. 2, Groups A, B, C, D T4 |

UL, Canada

| | |
|---|---|
| Identification | Class I, Zone 2, Ex ec IIC Gc T4 X |

UL, USA

| | |
|---|---|
| Identification | Class I, Zone 2, AEx ec IIC T4 |

Shipbuilding approval

| | |
|---|---|
| Certificate | TAE0000196 |

Shipbuilding data

| | |
|---|---|
| Temperature | D |
| Humidity | A |
| Vibration | C |
| EMC | B |
| Enclosure | Required protection according to the Rules shall be provided upon installation on board |

## EMC data

| | |
|---|---|
| Electromagnetic compatibility | Conformance with EMC directive |
| Low Voltage Directive | Conformance with Low Voltage Directive |

## Standards and regulations

Air clearances and creepage distances

| | |
|---|---|
| Standards/regulations | EN IEC 60664-1 |

## Mounting

| | |
|---|---|
| Mounting type | Plug-on assembly |
| Assembly note | in rows with zero spacing |
| Mounting position | any |

## Notes

| | |
|---|---|
| Notes on operation | For proper use, the specifications of the installation directive (see Downloads) must be observed. For applications or use with third-party products, the specifications, and the safety and warning instructions of the respective third-party manufacturer must also be met. |

## Drawings

Dimensional drawing

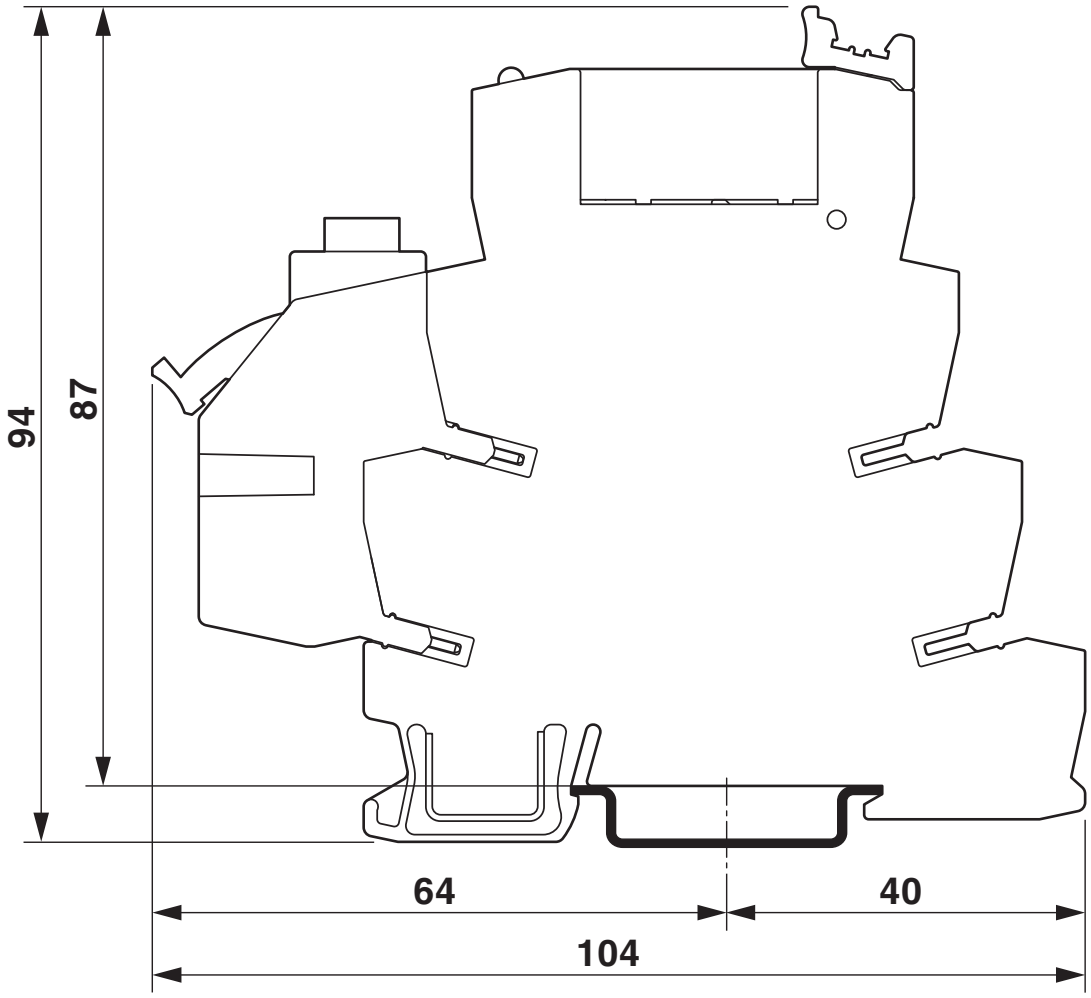

Schematic diagram

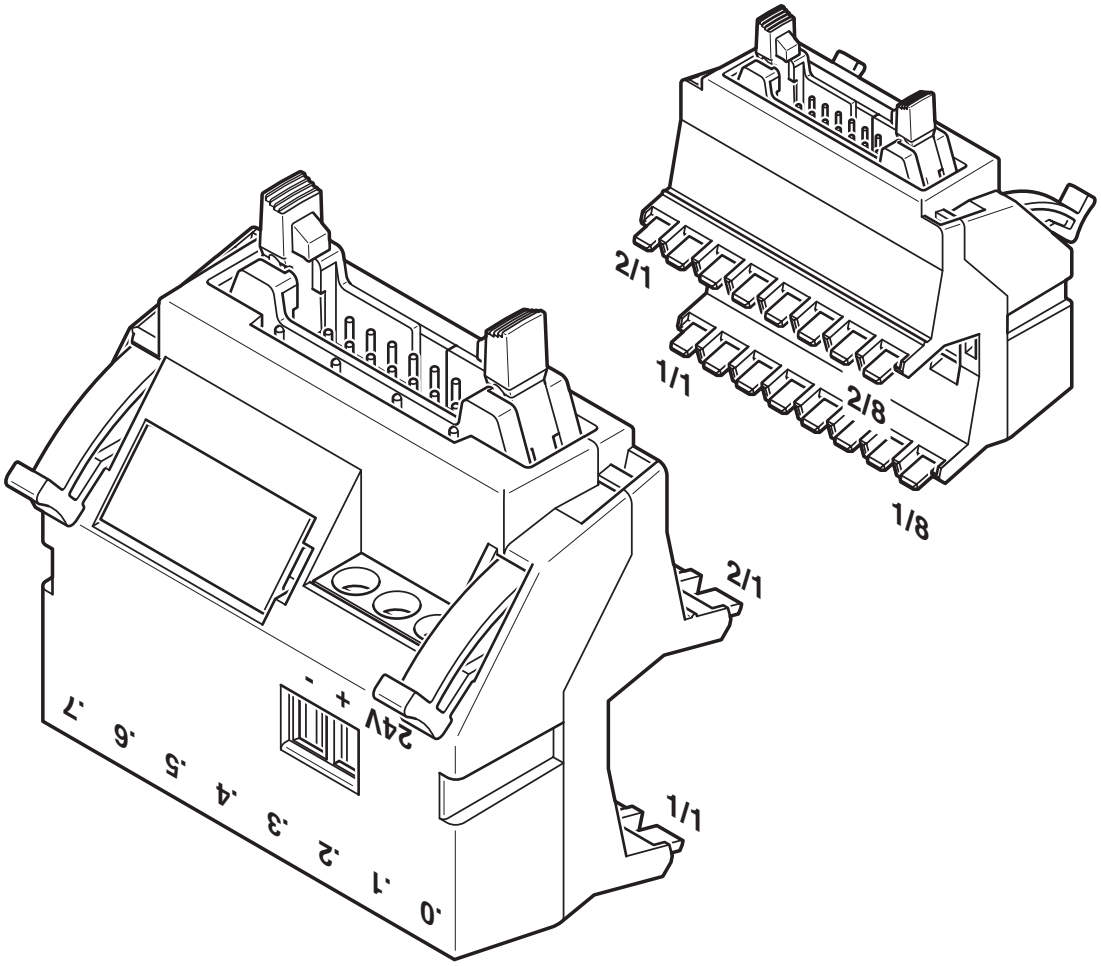

Circuit diagram

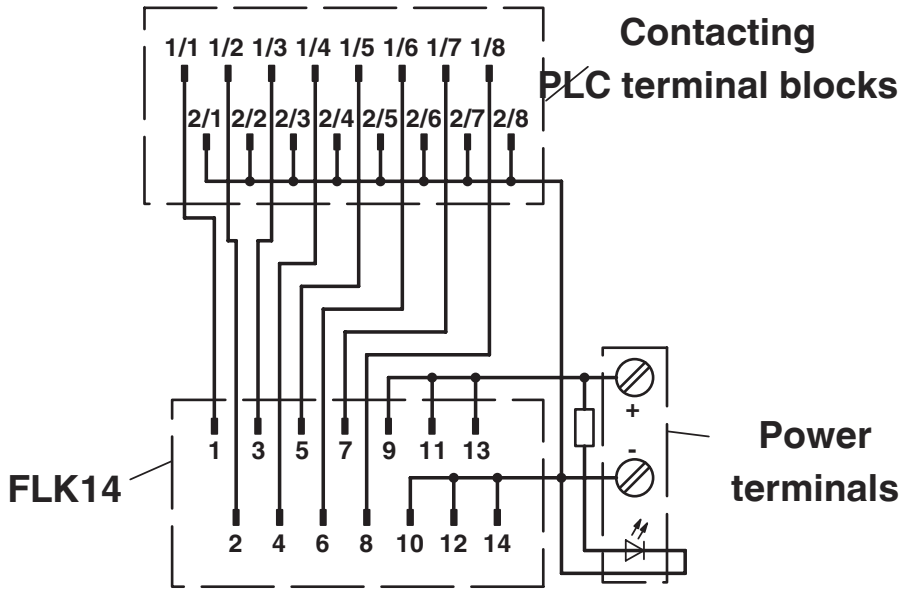


PLC-V8/FLK14/OUT connection scheme

## Approvals

To download certificates, visit the product detail page: https://www.phoenixcontact.com/us/products/2295554

**cUL Recognized**
Approval ID: E238705

| | Nominal voltage $U_N$ | Nominal current $I_N$ | Cross section AWG | Cross section $mm^2$ |
|---|---|---|---|---|
| keine | | | | |
| | 24 V | 1 A | - | - |

**UL Recognized**
Approval ID: E238705

| | Nominal voltage $U_N$ | Nominal current $I_N$ | Cross section AWG | Cross section $mm^2$ |
|---|---|---|---|---|
| keine | | | | |
| | 24 V | 1 A | - | - |

**UL Listed**
Approval ID: FILE E 172140

**cUL Listed**
Approval ID: FILE E 172140

**DNV**
Approval ID: TAE0000196

**cUL Listed**
Approval ID: E199827

**UL Listed**
Approval ID: E199827

## Classifications

### ECLASS

| | |
|---|---|
| ECLASS-13.0 | 27141152 |
| ECLASS-15.0 | 27141152 |

### ETIM

| | |
|---|---|
| ETIM 10.0 | EC002780 |

### UNSPSC

| | |
|---|---|
| UNSPSC 21.0 | 39121400 |

## Environmental product compliance

EU RoHS

| | |
|---|---|
| Fulfills EU RoHS substance requirements | Yes |
| Exemption | 6(c) |

China RoHS

| | |
|---|---|
| Environment friendly use period (EFUP) | EFUP-50 |
| | An article-related China RoHS declaration table can be found in the download area for the respective article under "Manufacturer declaration". For all articles with EFUP-E, no China RoHS declaration table issued and required. |

EU REACH SVHC

| | |
|---|---|
| REACH candidate substance (CAS No.) | Hexahydromethylphthalic anhydride(CAS: n/a) |
| | Lead(CAS: 7439-92-1) |
| SCIP | 45eebf1d-aab8-4fb8-9a75-24099d0634c2 |

EF3.1 Climate Change

| | |
|---|---|
| CO2e kg | 1.46 kg CO2e |

Phoenix Contact 2026 © - all rights reserved
https://www.phoenixcontact.com

Phoenix Contact USA
586 Fulling Mill Road
Middletown, PA 17057, United States
(+717) 944-1300
info@phoenixcon.com