# PACT MCR-V1-21-44-125-5A-1 - Current transformer

2277763

https://www.phoenixcontact.com/us/products/2277763

Please be informed that the data shown in this PDF document is generated from our online catalog. Please find the complete data in the user documentation. Our general terms of use for downloads are valid.



Bus-bar current transformer, 125 A AC primary current; 5 A AC secondary current; accuracy class 1; 3.75 VA rated power

## Product description

Our PACT current transformers for new installations offer a complete portfolio for converting alternating currents up to 4000 A AC. PACT current transformers are available as bus-bar, window-type, and winding current transformers with a range of different transformation ratios, accuracy classes, and rated powers suitable for your current measurement tasks.

## Your advantages

- Protection against destruction: short-circuiting of the transformer by rotating the terminal cover 90°
- Variable mounting with flexible mounting options
- Detect peak loads reliably with a thermal nominal continuous current that is 120% of the primary rated current
- Increased electrical safety with high rated insulation voltages
- Space-saving design with consistently narrow housing widths of 30 mm

## Commercial data

| | |
|---|---|
| Item number | 2277763 |
| Packing unit | 1 pc |
| Minimum order quantity | 1 pc |
| Sales key | C444 |
| Product key | CMMA11 |
| GTIN | 4046356502054 |
| Weight per piece (including packing) | 212.9 g |
| Weight per piece (excluding packing) | 100 g |
| Customs tariff number | 85043129 |
| Country of origin | DE |

# Technical data

## Product properties

| | |
|---|---|
| Product type | Current transformer |
| Product family | Bus-bar current transformer |

## Electrical properties

| | |
|---|---|
| Rated insulation voltage | 1 kV (Phase/neutral conductor) |

### General

| | |
|---|---|
| Can be calibrated | no |
| Converter type | Bus-bar current transformer |

## Input data

### Current transformer

| | |
|---|---|
| Rated power | 3.75 VA |
| Thermal rated short-time current | $I_{th}$ = 60 * $I_n$ |
| Thermal rated continuous current | $I_d$ = 1.2 * $I_n$ |
| Rated surge current | $I_{dyn}$ = 2.5 * $I_{th}$ |
| Rated frequency $f_n$ | 50 Hz |
| | 60 Hz |
| Primary rated current $I_{pn}$ | 0 A AC ... 125 A AC |
| Can be calibrated | no |
| Converter type | Bus-bar current transformer |

## Output data

### Signal

| | |
|---|---|
| Designation | Current output |
| Secondary rated current $I_{sn}$ | 5 A AC |
| Surge current limitation factor | FS 5 |
| Accuracy class | 1 |

## Connection data

| | |
|---|---|
| Connection method | Screw connection |
| Stripping length | 10 mm |
| Conductor cross-section flexible | 1.5 mm² ... 10 mm² (per secondary terminal) |
| Tightening torque | 2 Nm ... 2 Nm |

## Dimensions

### Item dimensions

| | |
|---|---|
| Width | 31 mm |
| Height | 68 mm |
| Depth | 44 mm |

Item dimensions with alternative mounting

| | |
|---|---|
| Width | 44 mm |
| Height | 68 mm |
| Depth | 31 mm |

Circular conductor

| | |
|---|---|
| Diameter | 20 mm |

Drill hole

| | |
|---|---|
| Diameter | 6.5 mm |

## Material specifications

| | |
|---|---|
| Color | gray (RAL 7042) |
| Flammability rating according to UL 94 | V0 (Housing) |
| Housing material | PA 6.6 |

## Environmental and real-life conditions

Ambient conditions

| | |
|---|---|
| Ambient temperature (operation) | -25 °C ... 40 °C |
| Ambient temperature (storage/transport) | -25 °C ... 40 °C |
| Altitude | ≤ 1000 m |
| Permissible humidity (operation) | Use only indoors, non-condensing |
| Insulating material class | H |

## Approvals

CE

| | |
|---|---|
| Certificate | CE-compliant |

UKCA

| | |
|---|---|
| Certificate | UKCA-compliant |

UL, USA/Canada

| | |
|---|---|
| Identification | XODW8.E323953 |

## Standards and regulations

| | |
|---|---|
| Standards/regulations | EN 61869 |

## Mounting

| | |
|---|---|
| Mounting type | DIN rail mounting |
| | Panel mounting |

## Drawings

Dimensional drawing

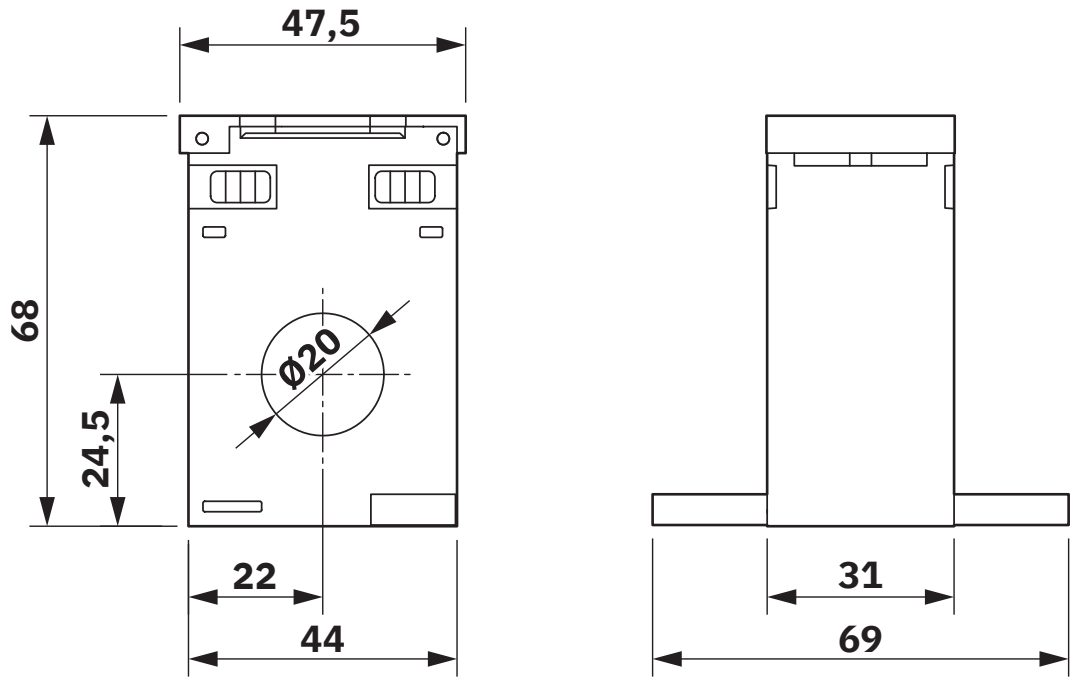

## Approvals

To download certificates, visit the product detail page: https://www.phoenixcontact.com/us/products/2277763

**cULus Recognized**
Approval ID: E323953

## Classifications

### ECLASS

| | |
|---|---|
| ECLASS-13.0 | 27210902 |
| ECLASS-15.0 | 27210902 |

### ETIM

| | |
|---|---|
| ETIM 10.0 | EC002048 |

### UNSPSC

| | |
|---|---|
| UNSPSC 21.0 | 39121000 |

## Environmental product compliance

EU RoHS

| | |
|---|---|
| Fulfills EU RoHS substance requirements | Yes, No exemptions |

China RoHS

| | |
|---|---|
| Environment friendly use period (EFUP) | EFUP-E |
| | No hazardous substances above the limits |

EU REACH SVHC

| | |
|---|---|
| REACH candidate substance (CAS No.) | No substance above 0.1 wt% |

EF3.1 Climate Change

| | |
|---|---|
| CO2e kg | 2.759 kg CO2e |

Phoenix Contact 2026 © - all rights reserved
https://www.phoenixcontact.com

Phoenix Contact USA
586 Fulling Mill Road
Middletown, PA 17057, United States
(+717) 944-1300
info@phoenixcon.com