ECS-B-122X169-S-UV1-V - Electronics housing

2230002

https://www.phoenixcontact.com/us/products/2230002

Please be informed that the data shown in this PDF document is generated from our online catalog. Please find the complete data in the user documentation. Our general terms of use for downloads are valid.



Vented housing of the ECS range, screw locking mechanism, degree of protection: IP66/IP67/IP68/IP69 when combined with matching front panel, color: black (9005), width: 164 mm, height: 176 mm, depth: 64 mm

Your advantages

- Housing design supports the installation of a range of PCB thicknesses for high application diversity
- Integrated pressure compensation membrane for fluctuating ambient pressures
- Optional accessories for wall and mast mounting
- Proven PCB connection technology
- Integrated tamper protection
- Effective protection of electronics against thermal and mechanical influences
- Suitable for outdoor/indoor applications

Commercial data

Item number	2230002
Packing unit	5 pc
Minimum order quantity	5 pc
Sales key	AC04
Product key	ACFDAA
GTIN	4055626381350
Weight per piece (including packing)	261 g
Weight per piece (excluding packing)	348 g
Customs tariff number	84879090
Country of origin	US

Technical data

Notes

Assembly note	Please observe the application note in the download area.
Degree of protection	The specification for IP protection applies to the item combination ECS-B-... in conjunction with an unaltered ECS-P...-B front panel.
Degree of protection	When using front panels with connection technology, the IP protection class of the connection technology determines the protection class of the overall solution.
Recommendation	Further information and detailed dimensions are available in the download area.

Product properties

Product type	Housing
Housing type	Outdoor housing
Housing type	Outdoor housings
Housing series	ECS
Product family	ECS..122X..S..
Battery compartment	no
Ventilation	integrated pressure compensation membrane

Dimensions

Dimensional drawing	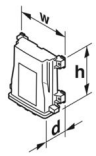
Width	164 mm
Height	176 mm
Depth	64 mm

PCB design

PCB thickness	1.57 mm ... 2.36 mm

Material specifications

Color (Housing)	black (RAL 9005)
Material Housing	PC
Flammability rating according to UL 94	V0

Environmental and real-life conditions

Vibration test

Specification	IEC 60068-2-6:2007-12
Frequency	10 - 2000 - 10 Hz
Sweep speed	1 octave/min

Acceleration	15g (61.6 Hz ... 2000 Hz)
Test duration per axis	2.5 h
Test directions	X-, Y- and Z-axis

Glow-wire test

Specification	IEC 60695-2-11:2014-02
Temperature	850 °C
Time of exposure	30 s

Mechanical strength / tumbling barrel

Specification	IEC 60068-2-31:2008-05
Height of fall	50 cm
Frequency	50

Shocks

Specification	IEC 60068-2-27:2008-02
Pulse shape	Semi-sinusoidal
Acceleration	50g
Shock duration	11 ms
Number of shocks per direction	3
Test directions	X-, Y- and Z-axis (pos. and neg.)

Salt spray test

Specification	DIN EN 60068-2-11:2000-02
Test duration	96 h

Test for substances that would hinder coating with paint or varnish

Specification	VDMA 24364:2018-05
Result	Test passed

Degree of protection (IP code)

Specification	IEC 60529:1989-11 + AMD 1:1999-11 + AMD 2:2013-08
Result, degree of protection, IP code	IP66/IP67 (1 m/30 min)/IP68 (2 m/24 h)/IP69/IP69K

Ambient conditions

Max. IP code to attain	IP69
Max. NEMA code to attain	6
Impact strength	IK08
Ambient temperature (operation)	-40 °C ... 100 °C
Ambient temperature (storage/transport)	-40 °C ... 100 °C

PCB data

Number of PCB holders	1
Type of PCB mount	Bolt mounting
Thickness of the PCB	1.57 mm ... 2.36 mm

Mounting

Mounting type	Wall or panel mount. Pole mount with accessory.

Drawings

Dimensional drawing

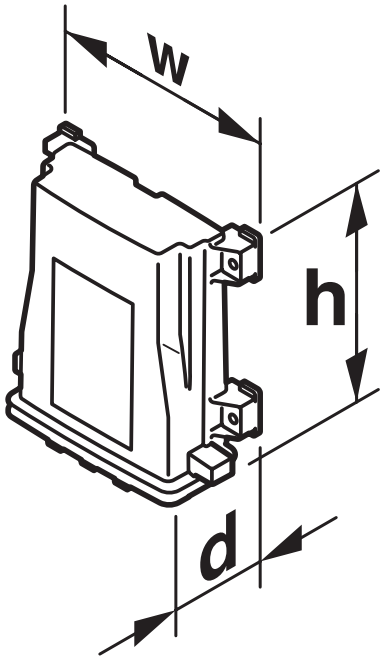

Classifications

ECLASS

ECLASS-13.0	27190601
ECLASS-15.0	27190601

ETIM

ETIM 10.0	EC002779

UNSPSC

UNSPSC 21.0	31261500

Environmental product compliance

EU RoHS

Fulfills EU RoHS substance requirements	Yes, No exemptions

China RoHS

Environment friendly use period (EFUP)	EFUP-E
	No hazardous substances above the limits

EU REACH SVHC

REACH candidate substance (CAS No.)	No substance above 0.1 wt%

Phoenix Contact 2026 © - all rights reserved
https://www.phoenixcontact.com

Phoenix Contact USA
586 Fulling Mill Road
Middletown, PA 17057, United States
(+717) 944-1300
info@phoenixcon.com