ICS20-F45S-7035 - Connection plate

2203889

https://www.phoenixcontact.com/us/products/2203889

Please be informed that the data shown in this PDF document is generated from our online catalog. Please find the complete data in the user documentation. Our general terms of use for downloads are valid.

DIN rail housing, ICS filler, closed, width: 20 mm, height: 7.25 mm, depth: 44.9 mm, color: light gray (similar RAL 7035)



Your advantages

- Flexible use, thanks to the modular system and unique modularity in the connection technology
- Standardized connections such as RJ45, USB, D-SUB and antenna sockets as components that can be integrated
- Optimal space utilization, as well as adaptability of design, colors, and printing
- Customized processing for any customer-specific connection technology
- Easy and fast push-in mounting of assembled printed-circuit boards, thanks to stable guide rails

Commercial data

Item number	2203889
Packing unit	10 pc
Minimum order quantity	10 pc
Sales key	AC09
Product key	ACHAEE
GTIN	4055626465944
Weight per piece (including packing)	2.965 g
Weight per piece (excluding packing)	2.965 g
Customs tariff number	85389099
Country of origin	DE

Technical data

Notes

Assembly note	Please observe the application note in the download area.

Product properties

Product type	Connection plate
Housing type	DIN rail housing
Housing type	Modular housings
Housing series	ICS
Product family	ICS20
Ventilation openings present	no

Dimensions

Dimensional drawing	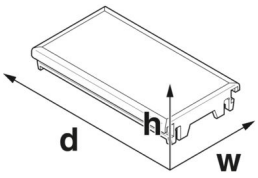
Width	20 mm
Height	7.25 mm
Depth	44.9 mm

PCB design

PCB thickness	1.4 mm ... 1.8 mm

Material specifications

Color (Connection plate)	light gray (RAL 7035)
Material Connection plate	PA
Flammability rating according to UL 94	V0
CTI according to IEC 60112	600

Environmental and real-life conditions

Vibration test

Specification	IEC 60068-2-6:2007-12
Frequency	10 - 150 - 10 Hz
Sweep speed	1 octave/min
Amplitude	0.15 mm (10 Hz ... 58.1 Hz)
Acceleration	2g (58.1 Hz ... 150 Hz)
Test duration per axis	2.5 h
Test directions	X-, Y- and Z-axis

Glow-wire test

Specification	IEC 60695-2-11:2014-02
Temperature	850 °C
Time of exposure	30 s

Thermal stability / ball thrust test

Specification	IEC 60695-10-2:2014-02
Temperature	125 °C
Test duration	1 h
Force	20 N

Mechanical strength / tumbling barrel

Specification	IEC 60068-2-31:2008-05
Height of fall	50 cm
Frequency	50

Shocks

Specification	IEC 60068-2-27:2008-02
Pulse shape	Half-sine
Acceleration	15g
Shock duration	11 ms
Number of shocks per direction	3
Test directions	X-, Y- and Z-axis (pos. and neg.)

Test for substances that would hinder coating with paint or varnish

Specification	VDMA 24364:2018-05
Result	Test passed

Ambient conditions

Max. IP code to attain	IP20
Ambient temperature (operation)	-40 °C ... 105 °C (depending on power dissipation)
Ambient temperature (storage/transport)	-40 °C ... 55 °C
Ambient temperature (assembly)	-5 °C ... 100 °C
Relative humidity (storage/transport)	80 %

PCB data

Number of PCB holders	2
Type of PCB mount	Slot
Thickness of the PCB	1.4 mm ... 1.8 mm

Mounting

Mounting type	Slot

Packaging specifications

Outer packaging type	Resealable bag

Drawings

Dimensional drawing

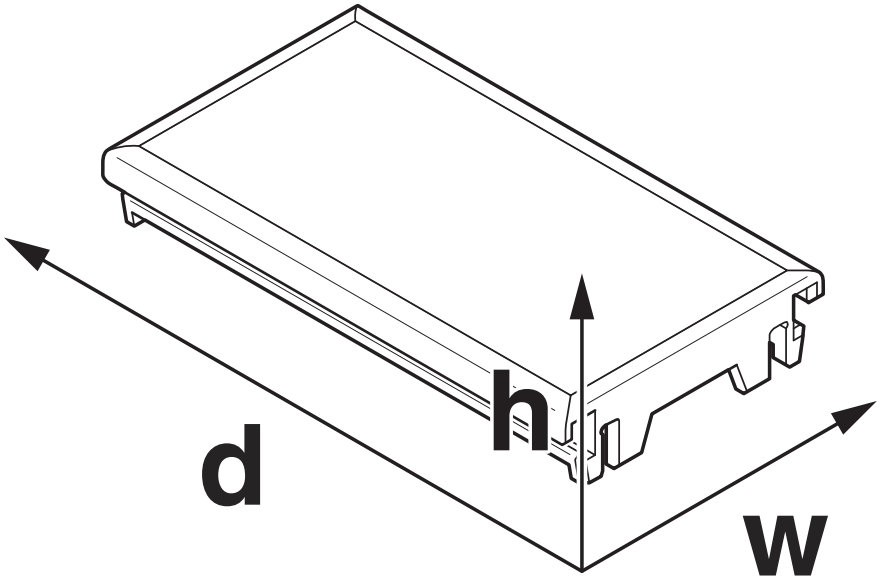

Schematic figure for illustrating the item dimensions. The figure is not of the desired product. For further details, refer to the product drawings in the “Downloads” tab.

Approvals

To download certificates, visit the product detail page: https://www.phoenixcontact.com/us/products/2203889

UL Recognized
Approval ID: E240868

Classifications

ECLASS

ECLASS-13.0	27190605
ECLASS-15.0	27190605

ETIM

ETIM 10.0	EC002779

UNSPSC

UNSPSC 21.0	31261500

Environmental product compliance

EU RoHS

Fulfills EU RoHS substance requirements	Yes, No exemptions

China RoHS

Environment friendly use period (EFUP)	EFUP-E
	No hazardous substances above the limits

EU REACH SVHC

REACH candidate substance (CAS No.)	No substance above 0.1 wt%

EF3.1 Climate Change

CO2e kg	0.022 kg CO2e

Phoenix Contact 2026 © - all rights reserved
https://www.phoenixcontact.com

Phoenix Contact USA
586 Fulling Mill Road
Middletown, PA 17057, United States
(+717) 944-1300
info@phoenixcon.com