RPI-BC 107,6 DEV-KIT KMGY - Electronics housing

2202874

https://www.phoenixcontact.com/us/products/2202874

Please be informed that the data shown in this PDF document is generated from our online catalog. Please find the complete data in the user documentation. Our general terms of use for downloads are valid.



DIN rail housing for Raspberry Pi computers (suitable for Raspberry Pi A+, B+, 2B, 3B, 4B, and 5B); set consisting of lower part, upper part, cover, and PCB retainer; housing according to DIN 43880

Your advantages

- Tool-free mounting
- Plenty of space for additional circuits on matrix or additional boards
- GPIO strip can be used with PTSM series connection technology
- Easy module-to-module connection, thanks to bus connection via DIN rails

Commercial data

Item number	2202874
Packing unit	1 pc
Minimum order quantity	1 pc
Sales key	AC10
Product key	ACHBAE
GTIN	4055626257211
Weight per piece (including packing)	119.4 g
Weight per piece (excluding packing)	119.4 g
Customs tariff number	85472000
Country of origin	DE

Technical data

Product properties

Product type	Stackable housing set
Housing type	DIN rail housing for use in distribution boards in accordance with DIN 43880
Housing type	Modular building installation housings
Housing series	BC
Product family	BC 107,6..
Ventilation openings present	yes

Dimensions

Dimensional drawing	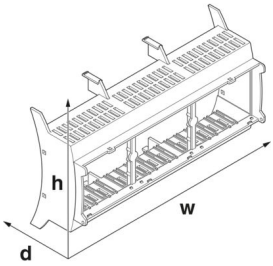
Width	107.6 mm
Height	89.7 mm
Depth	62.2 mm
Horizontal pitch	6 HP

Material specifications

Color (Upper housing part)	light gray (RAL 7035)
Color (Lower housing part)	light gray (RAL 7035)
Material	PC
Flammability rating according to UL 94	V0

Environmental and real-life conditions

Power dissipation single housing for 20 °C

Ambient temperature	20 °C
Reduction factor	1

Power dissipation single housing for 30 °C

Ambient temperature	30 °C
Reduction factor	0.84

Power dissipation single housing for 40 °C

Ambient temperature	40 °C
Reduction factor	0.72

Power dissipation single housing for 50 °C

Ambient temperature	50 °C
Reduction factor	0.6

Power dissipation single housing for 60 °C

Ambient temperature	60 °C
Reduction factor	0.48

Power dissipation single housing for 70 °C

Ambient temperature	70 °C
Reduction factor	0.38

Ambient conditions

Max. IP code to attain	IP20
Ambient temperature (operation)	-40 °C ... 105 °C (depending on power dissipation)
Ambient temperature (storage/transport)	-40 °C ... 70 °C
Ambient temperature (assembly)	-5 °C ... 100 °C

PCB data

Type of PCB mount	Latching

Mounting

Mounting type	Snap in

Packaging specifications

Type of packaging	packed in cardboard
Outer packaging type	Carton

Drawings

Dimensional drawing

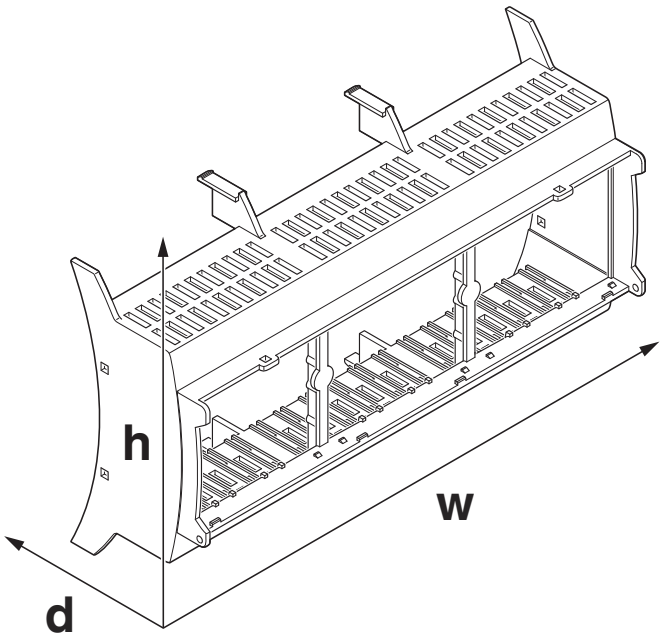

Schematic figure for illustrating the item dimensions. The figure is not of the desired product. For further details, refer to the product drawings in the “Downloads” tab.

Approvals

To download certificates, visit the product detail page: https://www.phoenixcontact.com/us/products/2202874

UL Recognized
Approval ID: E240868

Classifications

ECLASS

ECLASS-13.0	27190201
ECLASS-15.0	27190201

ETIM

ETIM 10.0	EC001031

UNSPSC

UNSPSC 21.0	31261500

Environmental product compliance

EU RoHS

Fulfills EU RoHS substance requirements	Yes, No exemptions

China RoHS

Environment friendly use period (EFUP)	EFUP-E
	No hazardous substances above the limits

EU REACH SVHC

REACH candidate substance (CAS No.)	No substance above 0.1 wt%

EF3.1 Climate Change

CO2e kg	0.518 kg CO2e

Phoenix Contact 2026 © - all rights reserved
https://www.phoenixcontact.com

Phoenix Contact USA
586 Fulling Mill Road
Middletown, PA 17057, United States
(+717) 944-1300
info@phoenixcon.com