UM-ALU 4-100,5 FRONT 95 AP - Front plate

2202096

https://www.phoenixcontact.com/us/products/2202096

Please be informed that the data shown in this PDF document is generated from our online catalog. Please find the complete data in the user documentation. Our general terms of use for downloads are valid.



Press-drawn section housings, Basic profile front plate, width: 101.8 mm, length: 95 mm, depth: 2 mm, recommended for UM-ALU 4-..COVER AL lateral elements

Your advantages

- Aluminum extruded profile
- Variety of connection technology
- Can be mounted on the DIN rail
- Available in lengths from 42.5 mm ... 990 mm, can be cut to any length
- Available in overall widths of 75 mm and 105 mm
- EMC protection

Commercial data

Item number	2202096
Packing unit	1 pc
Minimum order quantity	1 pc
Sales key	AC14
Product key	ACHDFZ
GTIN	4046356987646
Weight per piece (including packing)	58 g
Weight per piece (excluding packing)	53.9 g
Customs tariff number	76061191
Country of origin	DE

Technical data

Product properties

Product type	Component housing cover
Housing type	Press-drawn section housings
Housing series	UM-ALU
Product family	UM-ALU 4-100,5
Ventilation openings present	no

Dimensions

Width	101.8 mm
Depth	2 mm
Length	95 mm

Material specifications

Color (Housing)	aluminum color
Material Housing	Aluminum (anodized)
Surface characteristics	anodized

Environmental and real-life conditions

Ambient conditions

Max. IP code to attain	IP40
Ambient temperature (operation)	-40 °C ... 105 °C (depending on power dissipation)
Ambient temperature (storage/transport)	-40 °C ... 55 °C
Ambient temperature (assembly)	-5 °C ... 100 °C

Mounting

Mounting position	parallel to the DIN rail

Packaging specifications

Type of packaging	packed in cardboard
Outer packaging type	Carton

Drawings

Schematic diagram

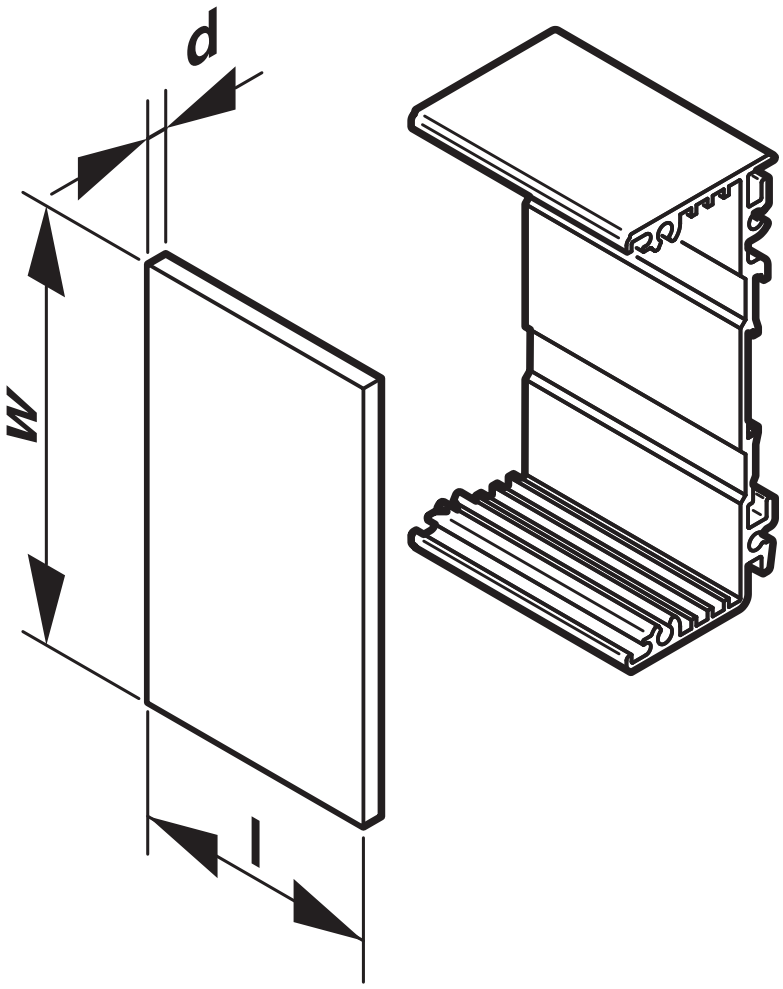

Classifications

ECLASS

ECLASS-13.0	27190605
ECLASS-15.0	27190605

ETIM

ETIM 10.0	EC002779

UNSPSC

UNSPSC 21.0	31261500

Environmental product compliance

EU RoHS

Fulfills EU RoHS substance requirements	Yes, No exemptions

China RoHS

Environment friendly use period (EFUP)	EFUP-E
	No hazardous substances above the limits

EU REACH SVHC

REACH candidate substance (CAS No.)	No substance above 0.1 wt%

Phoenix Contact 2026 © - all rights reserved
https://www.phoenixcontact.com

Phoenix Contact USA
586 Fulling Mill Road
Middletown, PA 17057, United States
(+717) 944-1300
info@phoenixcon.com