ME 90 UT TBUS KMGY - Mounting base housing

2200545

https://www.phoenixcontact.com/us/products/2200545

Please be informed that the data shown in this PDF document is generated from our online catalog. Please find the complete data in the user documentation. Our general terms of use for downloads are valid.



DIN rail housing, Lower housing part with metal foot catch, tall design, with vents, width: 90.4 mm, height: 99 mm, depth: 107.3 mm, color: light gray (similar RAL 7035), cross connection: DIN rail bus connector (optional), number of positions cross connector: 5

Your advantages

- Tool-free mounting
- Available in overall widths from 12.5 mm ... 90 mm, modular extension is possible
- Flammability rating V0 in accordance with UL 94
- Variety of connection technology
- Can be mounted on the DIN rail
- With integrated or DIN-rail-mountable bus connector as an option

Commercial data

Item number	2200545
Packing unit	10 pc
Minimum order quantity	10 pc
Note	Made to order (non-returnable)
Sales key	AC08
Product key	ACHAAC
GTIN	4046356608107
Weight per piece (including packing)	95.93 g
Weight per piece (excluding packing)	94 g
Customs tariff number	85389099
Country of origin	DE

Technical data

Notes

Assembly note	Please observe the application note in the download area.
Recommendation	Material of contact pads for bus connector, galvanic gold (hard gold)

Product properties

Product type	Lower housing part
Housing type	DIN rail housing
Housing series	ME
Product family	ME 90..
Type	Lower housing parts with vents, housing cover necessary to complete the module
Max. number of positions	0)
Ventilation openings present	yes

Dimensions

Dimensional drawing	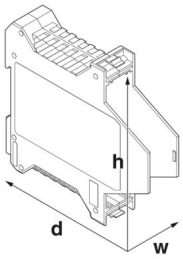
Width	90.4 mm
Height	99 mm
Depth	107.3 mm
Depth from top edge of DIN rail	100.7 mm
Depth from top edge of DIN rail to support point on upper part	68.5 mm

PCB design

PCB thickness	1.4 mm ... 1.8 mm

Material specifications

Color (Lower housing part)	light gray (RAL 7035)
Material	PA
Flammability rating according to UL 94	V0
CTI according to IEC 60112	600

Environmental and real-life conditions

Power dissipation single housing for 20 °C

Ambient temperature	20 °C

Reduction factor	1
Mounting position	vertical
Power dissipation	10.4 W

Power dissipation single housing for 30 °C

Ambient temperature	30 °C
Reduction factor	0.91
Mounting position	vertical
Power dissipation	9.5 W

Power dissipation single housing for 40 °C

Ambient temperature	40 °C
Reduction factor	0.81
Mounting position	vertical
Power dissipation	8.4 W

Power dissipation single housing for 50 °C

Ambient temperature	50 °C
Reduction factor	0.7
Mounting position	vertical
Power dissipation	7.3 W

Power dissipation single housing for 60 °C

Ambient temperature	60 °C
Reduction factor	0.57
Mounting position	vertical
Power dissipation	5.9 W

Power dissipation single housing for 70 °C

Ambient temperature	70 °C
Reduction factor	0.49
Mounting position	vertical
Power dissipation	5.1 W

Vibration test

Specification	IEC 60068-2-6:2007-12
Frequency	10 - 150 - 10 Hz
Sweep speed	1 octave/min
Amplitude	0.15 mm (10 Hz ... 58.1 Hz)
Acceleration	2g (58.1 Hz ... 150 Hz)
Test duration per axis	2.5 h
Test directions	X-, Y- and Z-axis

Glow-wire test

Specification	IEC 60695-2-11:2014-02
Temperature	850 °C
Time of exposure	30 s

Thermal stability / ball thrust test

Specification	IEC 60695-10-2:2014-02
Temperature	125 °C
Test duration	1 h
Force	20 N

Mechanical strength / tumbling barrel

Specification	IEC 60998-1:2002-12
Height of fall	50 cm
Frequency	10

Shocks

Specification	IEC 60068-2-27:2008-02
Pulse shape	Half-sine
Acceleration	15g
Shock duration	11 ms
Number of shocks per direction	3
Test directions	X-, Y- and Z-axis (pos. and neg.)

Degree of protection (IP code)

Specification	IEC 60529:1989-11 + AMD 1:1999-11 + AMD 2:2013-08

Ambient conditions

Max. IP code to attain	IP20
Ambient temperature (operation)	-40 °C ... 105 °C (depending on power dissipation)
Ambient temperature (storage/transport)	-40 °C ... 55 °C
Ambient temperature (assembly)	-5 °C ... 100 °C
Relative humidity (storage/transport)	80 %

PCB data

Number of PCB holders	4
Type of PCB mount	Insertion (optional latching by PCB stop)
Thickness of the PCB	1.4 mm ... 1.8 mm

Mounting

Mounting type	DIN rail mounting

Packaging specifications

Type of packaging	packed in cardboard
Outer packaging type	Carton

Drawings

Dimensional drawing

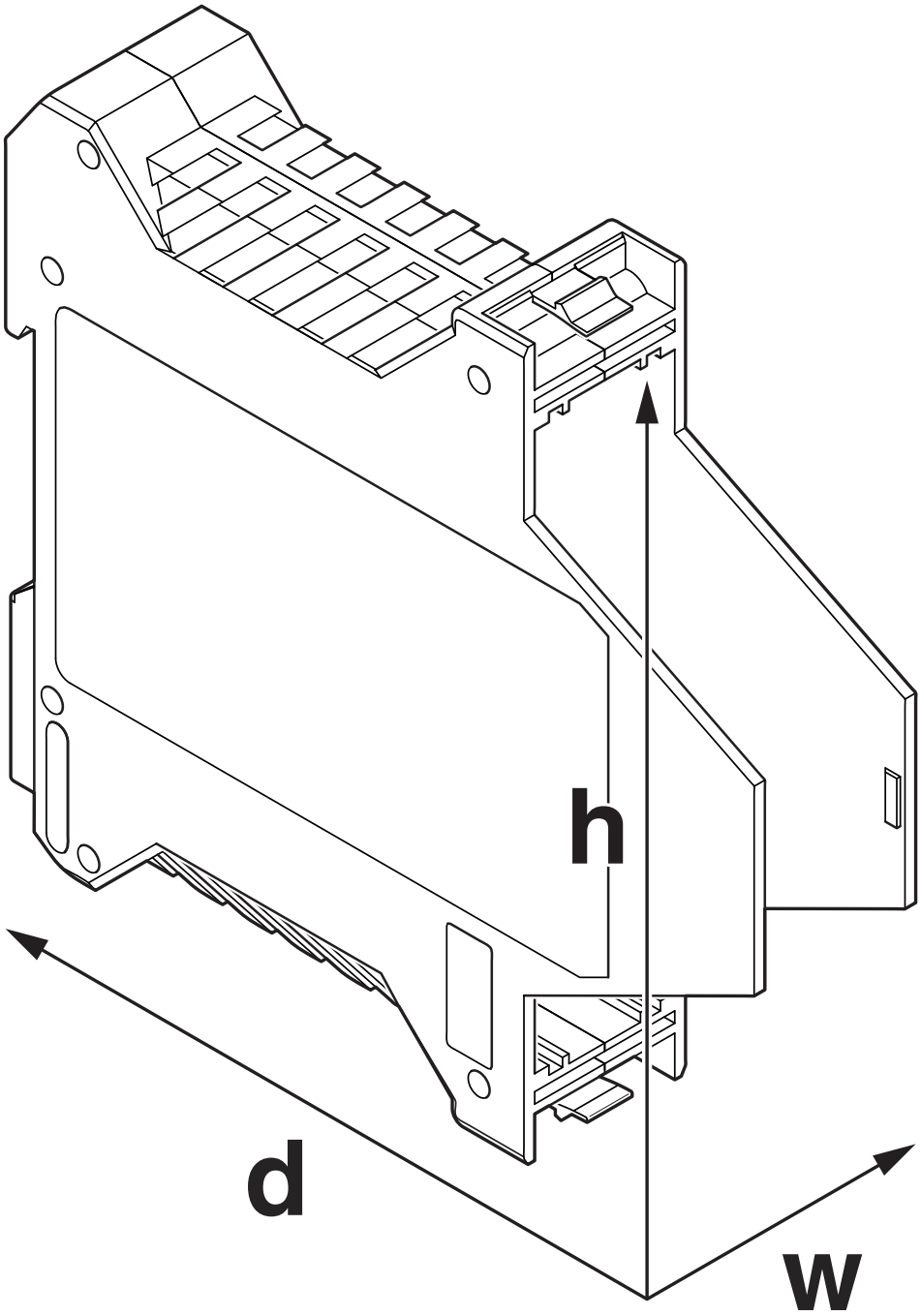

Schematic figure for illustrating the item dimensions. The figure is not of the desired product. For further details, refer to the product drawings in the “Downloads” tab.

Approvals

To download certificates, visit the product detail page: https://www.phoenixcontact.com/us/products/2200545

UL Recognized
Approval ID: E240868

Classifications

ECLASS

ECLASS-13.0	27190601
ECLASS-15.0	27190601

ETIM

ETIM 10.0	EC002779

UNSPSC

UNSPSC 21.0	31261500

Environmental product compliance

EU RoHS

Fulfills EU RoHS substance requirements	Yes, No exemptions

China RoHS

Environment friendly use period (EFUP)	EFUP-E
	No hazardous substances above the limits

EU REACH SVHC

REACH candidate substance (CAS No.)	No substance above 0.1 wt%

EF3.1 Climate Change

CO2e kg	0.625 kg CO2e

Phoenix Contact 2026 © - all rights reserved
https://www.phoenixcontact.com

Phoenix Contact USA
586 Fulling Mill Road
Middletown, PA 17057, United States
(+717) 944-1300
info@phoenixcon.com