PC 6-16/ 3-G1U-10,16 - PCB header

1996249

https://www.phoenixcontact.com/us/products/1996249

Please be informed that the data shown in this PDF document is generated from our online catalog. Please find the complete data in the user documentation. Our general terms of use for downloads are valid.



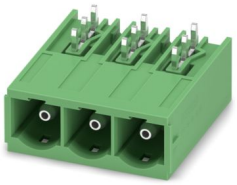

PCB headers, nominal cross section: 16 mm^2, color: green, nominal current: 76 A (41 A in combination with PC 6 plug), rated voltage (III/2): 1000 V, contact surface: Ag, contact connection type: Pin, number of potentials: 3, number of rows: 1, number of positions: 3, number of connections: 3, product range: PC 6-16/..-G1U, pitch: 10.16 mm, mounting: Wave soldering, pin layout: Linear pinning, solder pin [P]: 4 mm, number of solder pins per potential: 3, plug-in system: COMBICON PC 16, Pin connector pattern alignment: reversed, locking: without, mounting method: without, type of packaging: packed in cardboard

Your advantages

- Well-known mounting principle allows worldwide use
- Maximum flexibility when it comes to device design – one header for connectors with different connection technologies

Commercial data

Item number	1996249
Packing unit	50 pc
Minimum order quantity	50 pc
Sales key	AA05
Product key	AAESBD
GTIN	4046356037983
Weight per piece (including packing)	13.268 g
Weight per piece (excluding packing)	11.802 g
Customs tariff number	85366930
Country of origin	PL

Technical data

Product properties

Product type	PCB headers
Product family	PC 6-16/..-G1U
Product line	COMBICON Connectors XL
Type	Headers
Number of positions	3
Pitch	10.16 mm
Number of connections	3
Number of rows	1
Number of potentials	3
Mounting type	without
Pin layout	Linear pinning
Solder pins per potential	3

Fitting of components

Partial assembly	No

Electrical properties

Properties

Nominal current I_N	76 A (41 A in combination with PC 6 plug)
Nominal voltage U_N	1000 V
Rated voltage (III/3)	1000 V
Rated surge voltage (III/3)	8 kV
Rated voltage (III/2)	1000 V
Rated surge voltage (III/2)	8 kV
Rated voltage (II/2)	1000 V
Rated surge voltage (II/2)	6 kV

Mounting

Mounting type	Wave soldering
Pin layout	Linear pinning

Material specifications

Material data - contact

Note	WEEE/RoHS-compliant, free of whiskers according to IEC 60068-2-82/JEDEC JESD 201
Contact material	Cu alloy
Surface characteristics	Electroplated silver
Metal surface contact area (top layer)	Silver (4 µm - 8 µm Ag)
Metal surface contact area (middle layer)	Nickel (2 µm - 4 µm Ni)
Metal surface soldering area (top layer)	Silver (4 µm - 8 µm Ag)

Metal surface soldering area (middle layer)	Nickel (2 µm - 4 µm Ni)

Material data - housing

Color (Housing)	green (6021)
Insulating material	PA
Insulating material group	I
CTI according to IEC 60112	600
Flammability rating according to UL 94	V0
Glow wire flammability index GWFI according to EN 60695-2-12	850
Glow wire ignition temperature GWIT according to EN 60695-2-13	775
Temperature for the ball pressure test according to EN 60695-10-2	125 °C

Notes

General	In accordance with IEC 61984, COMBICON connectors have no switching power (COC). During designated use, they must not be plugged in or disconnected when carrying voltage or under load.

Dimensions

Dimensional drawing	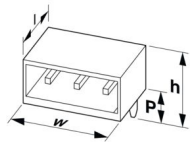
Pitch	10.16 mm
Width [w]	33.52 mm
Height [h]	17.4 mm
Length [l]	34 mm
Installed height	13.4 mm
Solder pin length [P]	4 mm
Pin dimensions	1 x 1.2 mm

PCB design

Pin spacing	1.16 mm
Hole diameter	1.7 mm

Electrical tests

Air clearances and creepage distances |

Specification	IEC 60664-1:2007-04
Insulating material group	I
Comparative tracking index (IEC 60112)	CTI 600
Rated insulation voltage (III/3)	1000 V
Rated surge voltage (III/3)	8 kV
minimum clearance value - non-homogenous field (III/3)	8 mm

minimum creepage distance (III/3)	12.5 mm
Rated insulation voltage (III/2)	1000 V
Rated surge voltage (III/2)	8 kV
minimum clearance value - non-homogenous field (III/2)	8 mm
minimum creepage distance (III/2)	8 mm
Rated insulation voltage (II/2)	1000 V
Rated surge voltage (II/2)	6 kV
minimum clearance value - non-homogenous field (II/2)	5.5 mm
minimum creepage distance (II/2)	5.5 mm

Environmental and real-life conditions

Ambient conditions

Ambient temperature (storage/transport)	-40 °C ... 70 °C
Relative humidity (storage/transport)	30 % ... 70 %
Ambient temperature (assembly)	-5 °C ... 100 °C
Ambient temperature (operation)	-40 °C ... 100 °C (dependent on the derating curve)

Packaging specifications

Type of packaging	packed in cardboard

Drawings

Dimensional drawing

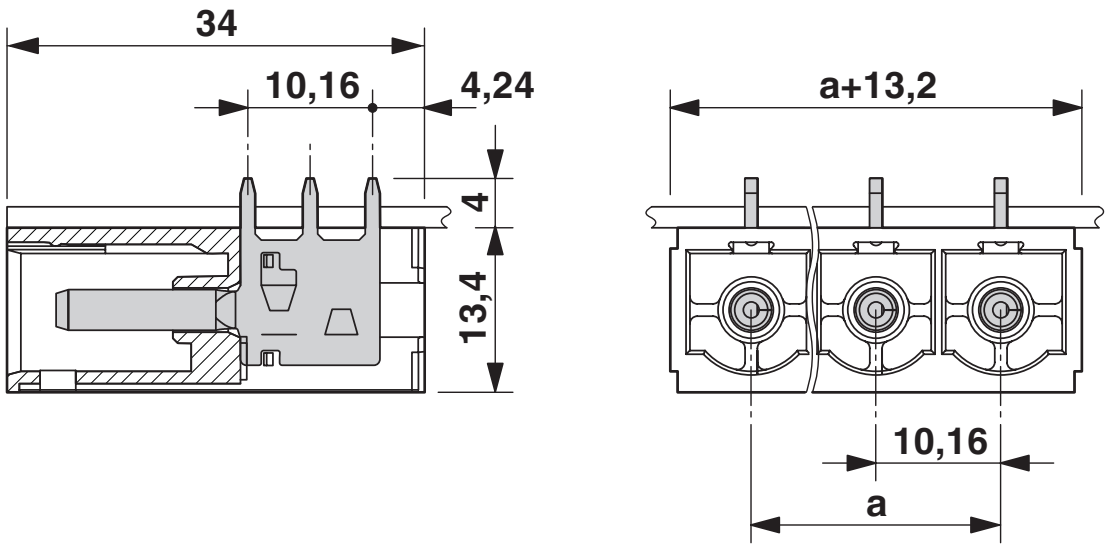

Drilling plan/solder pad geometry

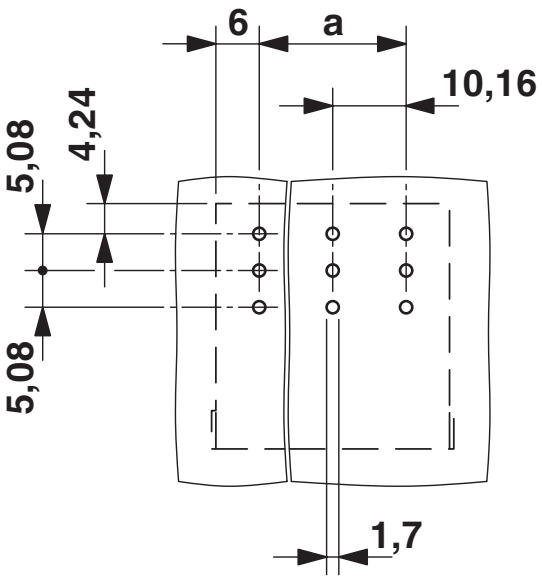

Approvals

To download certificates, visit the product detail page: https://www.phoenixcontact.com/us/products/1996249

cULus Recognized
Approval ID: E60425-20040202

	Nominal voltage U_N	Nominal current I_N	Cross section AWG	Cross section mm^2
B				
	300 V	66 A	-	-
C				
	300 V	66 A	-	-
D				
	600 V	5 A	-	-

VDE approval of drawings
Approval ID: 40055586

	Nominal voltage U_N	Nominal current I_N	Cross section AWG	Cross section mm^2
keine				
	1000 V	76 A	-	-

Classifications

ECLASS

ECLASS-13.0	27460201
ECLASS-15.0	27460201

ETIM

ETIM 10.0	EC002637

UNSPSC

UNSPSC 21.0	39121400

Environmental product compliance

EU RoHS

Fulfills EU RoHS substance requirements	Yes, No exemptions

China RoHS

Environment friendly use period (EFUP)	EFUP-E
	No hazardous substances above the limits

EU REACH SVHC

REACH candidate substance (CAS No.)	No substance above 0.1 wt%

EF3.1 Climate Change

CO2e kg	0.052 kg CO2e

Phoenix Contact 2026 © - all rights reserved
https://www.phoenixcontact.com

Phoenix Contact USA
586 Fulling Mill Road
Middletown, PA 17057, United States
(+717) 944-1300
info@phoenixcon.com