PT 1,5/ 2-PH-3,5 - PCB connector

1984316

https://www.phoenixcontact.com/us/products/1984316

Please be informed that the data shown in this PDF document is generated from our online catalog. Please find the complete data in the user documentation. Our general terms of use for downloads are valid.





The design shown may differ from the original item due to production processes!

PCB connector, nominal cross section: 1.5 mm^2, color: green, nominal current: 8 A, rated voltage (III/2): 200 V, contact surface: Sn, contact connection type: Socket, number of potentials: 2, number of rows: 1, number of positions: 2, number of connections: 2, product range: PT 1,5/..-PH, pitch: 3.5 mm, connection method: Screw connection with wire protector, screw head form: H1L Slotted Phillips recess, conductor/PCB connection direction: 0 °, plug-in system: COMBICON PST 1,0, locking: without, mounting method: without, type of packaging: packed in cardboard

Your advantages

- Well-known connection principle allows worldwide use
- Low temperature rise, thanks to maximum contact force
- High terminal block capacity thanks to rectangular terminal block space
- Allows connection of two conductors
- The latching on the side enables various numbers of positions to be combined

Commercial data

Item number	1984316
Packing unit	250 pc
Minimum order quantity	250 pc
Sales key	AA02
Product key	AABAIA
GTIN	4017918935870
Weight per piece (including packing)	1.511 g
Weight per piece (excluding packing)	1.27 g
Customs tariff number	85366990
Country of origin	CN

Technical data

Product properties

Product type	PCB connector
Product family	PT 1,5/..-PH
Product line	COMBICON Connectors S
Type	Plug for pin strip
Number of positions	2
Pitch	3.5 mm
Number of connections	2
Number of rows	1
Number of potentials	2
Mounting type	without

Fitting of components

Partial assembly	No

Electrical properties

Properties

Nominal current I_N	8 A
Nominal voltage U_N	200 V
Contact resistance	1.4 mΩ
Rated voltage (III/3)	160 V
Rated surge voltage (III/3)	2.5 kV
Rated voltage (III/2)	200 V
Rated surge voltage (III/2)	2.5 kV
Rated voltage (II/2)	400 V
Rated surge voltage (II/2)	2.5 kV

Connection data

Connection technology

Type	Plug for pin strip
Connector system	COMBICON PST 1,0
Nominal cross section	1.5 mm²
Contact connection type	Socket

Interlock

Locking type	without
Mounting type	without

Conductor connection

Connection method	Screw connection with wire protector
Conductor/PCB connection direction	0 °
Conductor cross-section rigid	0.2 mm² ... 1.5 mm²

Conductor cross-section flexible	0.2 mm² ... 1.5 mm²
Conductor cross-section AWG	26 ... 16
Conductor cross-section, flexible, with ferrule, with plastic sleeve	0.25 mm² ... 0.75 mm²
2 conductors with same cross section, rigid	0.2 mm² ... 0.34 mm²
2 conductors with same cross section, flexible	0.2 mm² ... 0.5 mm²
Cylindrical gauge a x b / diameter	2.4 mm x 1.5 mm / 1.9 mm
Stripping length	5 mm
Drive form screw head	Slotted Phillips recess (H1L)
Tightening torque	0.22 Nm ... 0.25 Nm

Material specifications

Material data - contact

Note	WEEE/RoHS-compliant, free of whiskers according to IEC 60068-2-82/JEDEC JESD 201
Contact material	Cu alloy
Surface characteristics	hot-dip tin-plated
Metal surface terminal point (top layer)	Tin (4 µm - 8 µm Sn)
Metal surface contact area (top layer)	Tin (4 µm - 8 µm Sn)

Material data - housing

Color (Housing)	green (6021)
Insulating material	PA
Insulating material group	I
CTI according to IEC 60112	600
Flammability rating according to UL 94	V0
Glow wire flammability index GWFI according to EN 60695-2-12	850
Glow wire ignition temperature GWIT according to EN 60695-2-13	775
Temperature for the ball pressure test according to EN 60695-10-2	125 °C

Dimensions

Dimensional drawing	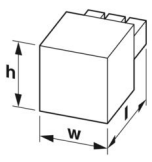
Pitch	3.5 mm
Width [w]	7 mm
Height [h]	11 mm
Length [l]	12.9 mm

Mechanical tests

Test for conductor damage and slackening

Specification	IEC 60999-1:1999-11
Result	Test passed

Pull-out test

Specification	IEC 60999-1:1999-11
Conductor cross-section/conductor type/tractive force setpoint/actual value	0.2 mm² / solid / > 10 N
	0.2 mm² / flexible / > 10 N
	1.5 mm² / solid / > 40 N
	1.5 mm² / flexible / > 40 N

Insertion and withdrawal forces

Specification	IEC 60512-7:1993-08
Result	Test passed
No. of cycles	10
Insertion strength per pos. approx.	4 N
Withdraw strength per pos. approx.	4 N

Torque test

Specification	IEC 60999-1:1999-11

Resistance of inscriptions

Specification	IEC 60068-2-70:1995-12
Result	Test passed

Polarization and coding

Specification	IEC 60512-7:1993-08 (Polarization)
Result	Test passed

Visual inspection

Specification	IEC 60512-1-1:2002-02
Result	Test passed

Dimension check

Specification	IEC 60512-1-2:2002-02
Result	Test passed

Environmental and real-life conditions

Durability test

Specification	IEC 60512-5:1992-08
Impulse withstand voltage at sea level	2.5 kV
Contact resistance R_1	1.4 mΩ
Contact resistance R_2	1.5 mΩ
Insertion/withdrawal cycles	10

Climatic test

Specification	ISO 6988:1985-02
Corrosive stress	0.2 dm^3 SO_2 on 300 dm^3/40 °C/1 cycle

Thermal stress	100 °C/168 h
Power-frequency withstand voltage	2 kV

Vibration test

Specification	IEC 60068-2-6:1995-03
Frequency	10 - 150 - 10 Hz
Sweep speed	1 octave/min
Amplitude	0.35 mm (10 Hz ... 60.1 Hz)
Acceleration	5g (60.1 Hz ... 150 Hz)
Test duration per axis	2.5 h
Test directions	X-, Y- and Z-axis

Ambient conditions

Ambient temperature (storage/transport)	-40 °C ... 70 °C
Relative humidity (storage/transport)	30 % ... 70 %
Ambient temperature (assembly)	-5 °C ... 100 °C
Ambient temperature (operation)	-40 °C ... 100 °C (dependent on the derating curve)

Electrical tests

Thermal test | Test group C

Specification	IEC 60512-5-1:2002-02
Tested number of positions	16

Insulation resistance

Specification	IEC 60512-3-1:2002-02
Insulation resistance, neighboring positions	10^{12} Ω

Air clearances and creepage distances |

Specification	IEC 60664-1:2007-04
Insulating material group	I
Comparative tracking index (IEC 60112)	CTI 600
Rated insulation voltage (III/3)	160 V
Rated surge voltage (III/3)	2.5 kV
minimum clearance value - non-homogenous field (III/3)	1.5 mm
minimum creepage distance (III/3)	2 mm
Rated insulation voltage (III/2)	200 V
Rated surge voltage (III/2)	2.5 kV
minimum clearance value - non-homogenous field (III/2)	1.5 mm
minimum creepage distance (III/2)	1.5 mm
Rated insulation voltage (II/2)	400 V
Rated surge voltage (II/2)	2.5 kV
minimum clearance value - non-homogenous field (II/2)	1.5 mm
minimum creepage distance (II/2)	2 mm

Packaging specifications

Type of packaging	packed in cardboard

Drawings

Dimensional drawing

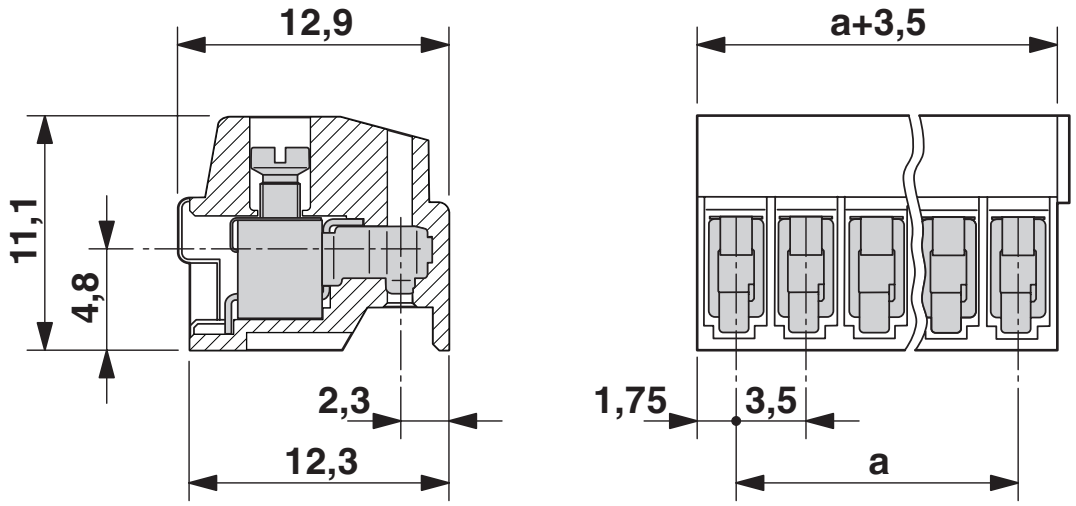

Diagram

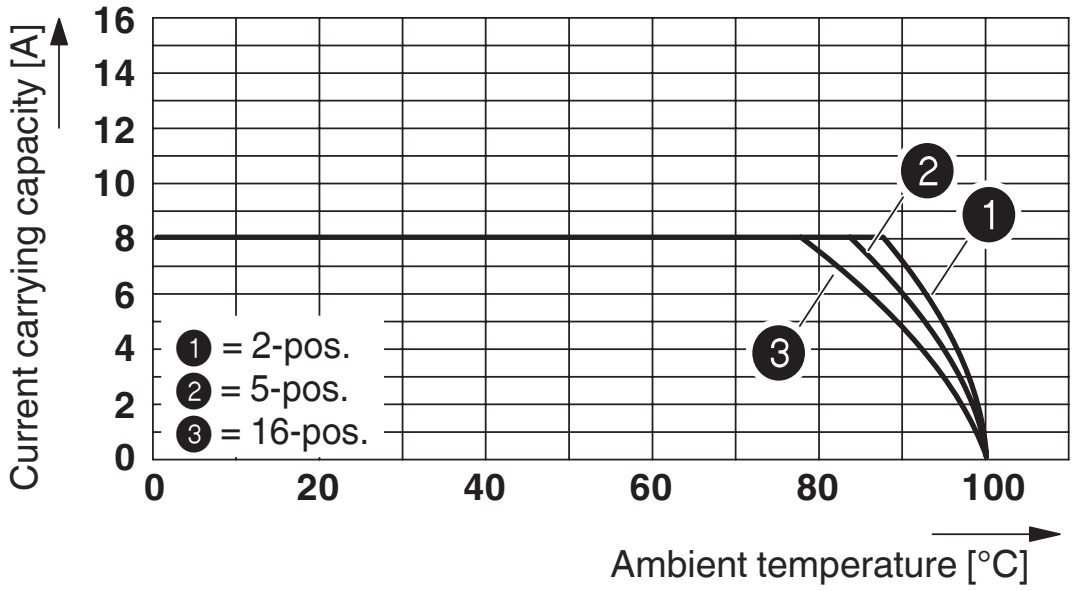

Type: PT 1,5/...-PH-3,5 with PST 1,0/...-3,5

Approvals

To download certificates, visit the product detail page: https://www.phoenixcontact.com/us/products/1984316

cULus Recognized
Approval ID: E60425-20030211

	Nominal voltage U_N	Nominal current I_N	Cross section AWG	Cross section mm^2
B				
	300 V	10 A	26 - 16	-
D				
	300 V	10 A	26 - 16	-

VDE Gutachten mit Fertigungsüberwachung
Approval ID: 40040542

	Nominal voltage U_N	Nominal current I_N	Cross section AWG	Cross section mm^2
keine				
	320 V	8 A	-	0.2 - 1.5

Classifications

ECLASS

ECLASS-13.0	27460202
ECLASS-15.0	27460202

ETIM

ETIM 10.0	EC002638

UNSPSC

UNSPSC 21.0	39121400

Environmental product compliance

EU RoHS

Fulfills EU RoHS substance requirements	Yes
Exemption	6(c)

China RoHS

Environment friendly use period (EFUP)	EFUP-50
	An article-related China RoHS declaration table can be found in the download area for the respective article under "Manufacturer declaration". For all articles with EFUP-E, no China RoHS declaration table issued and required.

EU REACH SVHC

REACH candidate substance (CAS No.)	Lead(CAS: 7439-92-1)
SCIP	3726a4b9-611f-4d7f-b90a-3b757202d5d4

EF3.1 Climate Change

CO2e kg	0.032 kg CO2e

Phoenix Contact 2026 © - all rights reserved
https://www.phoenixcontact.com

Phoenix Contact USA
586 Fulling Mill Road
Middletown, PA 17057, United States
(+717) 944-1300
info@phoenixcon.com