IPC 16/ 4-GF-10,16 - PCB header

1969632

https://www.phoenixcontact.com/us/products/1969632

Please be informed that the data shown in this PDF document is generated from our online catalog. Please find the complete data in the user documentation. Our general terms of use for downloads are valid.





PCB headers, nominal cross section: 16 mm^2, color: green, nominal current: 76 A, rated voltage (III/2): 1000 V, contact surface: Ag, contact connection type: Socket, number of potentials: 4, number of rows: 1, number of positions: 4, number of connections: 4, product range: IPC 16/..-GF, pitch: 10.16 mm, mounting: Wave soldering, pin layout: Linear pinning, solder pin [P]: 4 mm, number of solder pins per potential: 3, plug-in system: COMBICON PC 16, Pin connector pattern alignment: Standard, locking: Screw locking mechanism, mounting method: Threaded flange, type of packaging: packed in cardboard

Your advantages

- Well-known mounting principle allows worldwide use
- Maximum flexibility when it comes to device design – one header for connectors with different connection technologies
- Inverted header with socket contacts for touch-proof device outputs or PCB/PCB connections
- Screwable flange for superior mechanical stability
- Integrated double steel spring provides additional safety in the event of temperature and power fluctuations

Commercial data

Item number	1969632
Packing unit	50 pc
Minimum order quantity	50 pc
Sales key	AA05
Product key	AAESCB
GTIN	4017918943875
Weight per piece (including packing)	19.2 g
Weight per piece (excluding packing)	17.73 g
Customs tariff number	85366930
Country of origin	PL

Technical data

Product properties

Product type	PCB headers
Product family	IPC 16/..-GF
Product line	COMBICON Connectors XL
Type	Inverted
Number of positions	4
Pitch	10.16 mm
Number of connections	4
Number of rows	1
Number of potentials	4
Mounting type	Threaded flange
Pin layout	Linear pinning
Solder pins per potential	3

Fitting of components

Partial assembly	No

Electrical properties

Properties

Nominal current I_N	76 A
Nominal voltage U_N	1000 V
Contact resistance	0.3 mΩ
Rated voltage (III/3)	1000 V
Rated surge voltage (III/3)	8 kV
Rated voltage (III/2)	1000 V
Rated surge voltage (III/2)	8 kV
Rated voltage (II/2)	1000 V
Rated surge voltage (II/2)	6 kV

Mounting

Mounting type	Wave soldering
Pin layout	Linear pinning

Flange

Tightening torque	0.3 Nm

Attachment on the PCB

Tightening torque	0.3 Nm
Screw	1705449 DFK-PC 16-SS

Material specifications

Material data - contact

Note	WEEE/RoHS-compliant, free of whiskers according to IEC 60068-2-82/JEDEC JESD 201
Contact material	Cu alloy
Surface characteristics	completely silver-plated
Metal surface contact area (top layer)	Silver (4 µm - 8 µm Ag)
Metal surface soldering area (top layer)	Silver (4 µm - 8 µm Ag)

Material data - housing

Color (Housing)	green (6021)
Insulating material	PA
Insulating material group	I
CTI according to IEC 60112	600
Flammability rating according to UL 94	V0
Glow wire flammability index GWFI according to EN 60695-2-12	850
Glow wire ignition temperature GWIT according to EN 60695-2-13	775
Temperature for the ball pressure test according to EN 60695-10-2	125 °C

Notes

Notes on operation	In accordance with IEC 61984, COMBICON connectors have no switching power (COC). During designated use, they must not be plugged in or disconnected when carrying voltage or under load.

Dimensions

Dimensional drawing	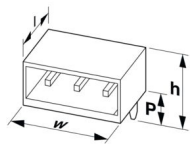
Pitch	10.16 mm
Width [w]	58.4 mm
Height [h]	17.6 mm
Length [l]	32.05 mm
Installed height	13.6 mm
Solder pin length [P]	4 mm
Pin dimensions	0.8 x 1.2 mm

PCB design

Pin spacing	10.16 mm
Hole diameter	1.7 mm

Mechanical tests

Visual inspection

Specification	IEC 60512-1-1:2002-02

Result	Test passed

Dimension check

Specification	IEC 60512-1-2:2002-02
Result	Test passed

Resistance of inscriptions

Specification	IEC 60068-2-70:1995-12
Result	Test passed

Polarization and coding

Specification	IEC 60512-13-5:2006-02
Result	Test passed

Contact holder in insert

Specification	IEC 60512-15-1:2008-05
Contact holder in insert Requirements >20 N	Test passed

Insertion and withdrawal forces

Specification	IEC 60512-13-2:2006-02
Result	Test passed
No. of cycles	50
Insertion strength per pos. approx.	12 N
Withdraw strength per pos. approx.	11 N

Electrical tests

Thermal test | Test group C

Specification	IEC 60512-5-1:2002-02
Tested number of positions	9

Insulation resistance

Specification	IEC 60512-3-1:2002-02
Insulation resistance, neighboring positions	> 5 MΩ

Air clearances and creepage distances |

Specification	IEC 60664-1:2007-04
Insulating material group	I
Comparative tracking index (IEC 60112)	CTI 600
Rated insulation voltage (III/3)	1000 V
Rated surge voltage (III/3)	8 kV
minimum clearance value - non-homogenous field (III/3)	8 mm
minimum creepage distance (III/3)	12.5 mm
Rated insulation voltage (III/2)	1000 V
Rated surge voltage (III/2)	8 kV
minimum clearance value - non-homogenous field (III/2)	8 mm
minimum creepage distance (III/2)	8 mm

Rated insulation voltage (II/2)	1000 V
Rated surge voltage (II/2)	6 kV
minimum clearance value - non-homogenous field (II/2)	5.5 mm
minimum creepage distance (II/2)	5.5 mm

Environmental and real-life conditions

Durability test

Specification	IEC 60512-9-1:2010-03
Impulse withstand voltage at sea level	9.8 kV
Contact resistance R_1	0.3 mΩ
Contact resistance R_2	0.3 mΩ
Insertion/withdrawal cycles	50
Insulation resistance, neighboring positions	> 5 MΩ

Climatic test

Specification	ISO 6988:1985-02
Corrosive stress	0.2 dm^3 SO_2 on 300 dm^3/40 °C/1 cycle
Thermal stress	105 °C/168 h
Power-frequency withstand voltage	4.26 kV

Vibration test

Specification	IEC 60068-2-6:2007-12
Frequency	10 - 150 - 10 Hz
Sweep speed	1 octave/min
Amplitude	0.35 mm (10 Hz ... 60.1 Hz)
Acceleration	5g (60.1 Hz ... 150 Hz)
Test duration per axis	2.5 h
Test directions	X-, Y- and Z-axis

Shocks

Specification	IEC 60068-2-27:2008-02
Pulse shape	Semi-sinusoidal
Acceleration	30g
Shock duration	18 ms
Test directions	X-, Y- and Z-axis (pos. and neg.)

Railway application: Shocks

Acceleration	30g
Shock duration	18 ms
Test directions	X-, Y- and Z-axis (pos. and neg.)

Ambient conditions

Ambient temperature (storage/transport)	-40 °C ... 70 °C
Relative humidity (storage/transport)	30 % ... 70 %
Ambient temperature (assembly)	-5 °C ... 100 °C
Ambient temperature (operation)	-40 °C ... 105 °C (dependent on the derating curve)

Packaging specifications

Type of packaging	packed in cardboard

Drawings

Dimensional drawing

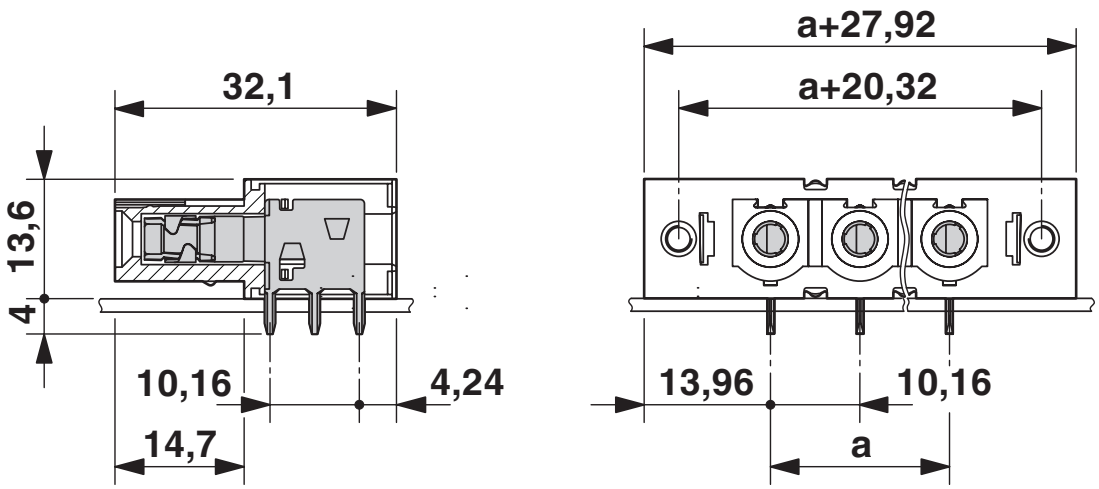

The figure shows the 3-pos. version

Diagram

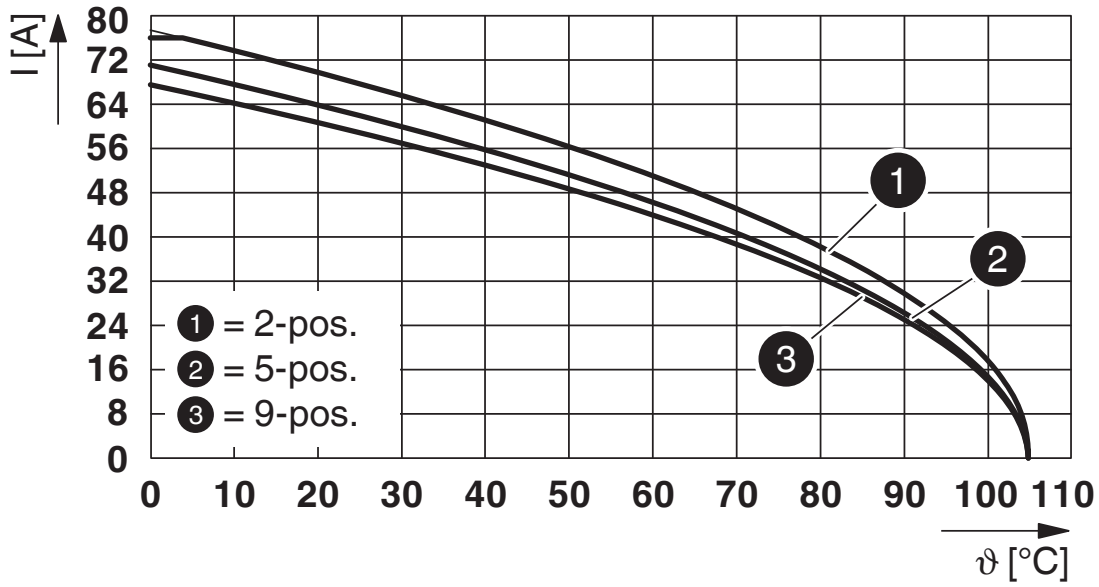

Type: IPC 16/...-STF-10,16 with IPC 16/...-GF-10,16

Diagram

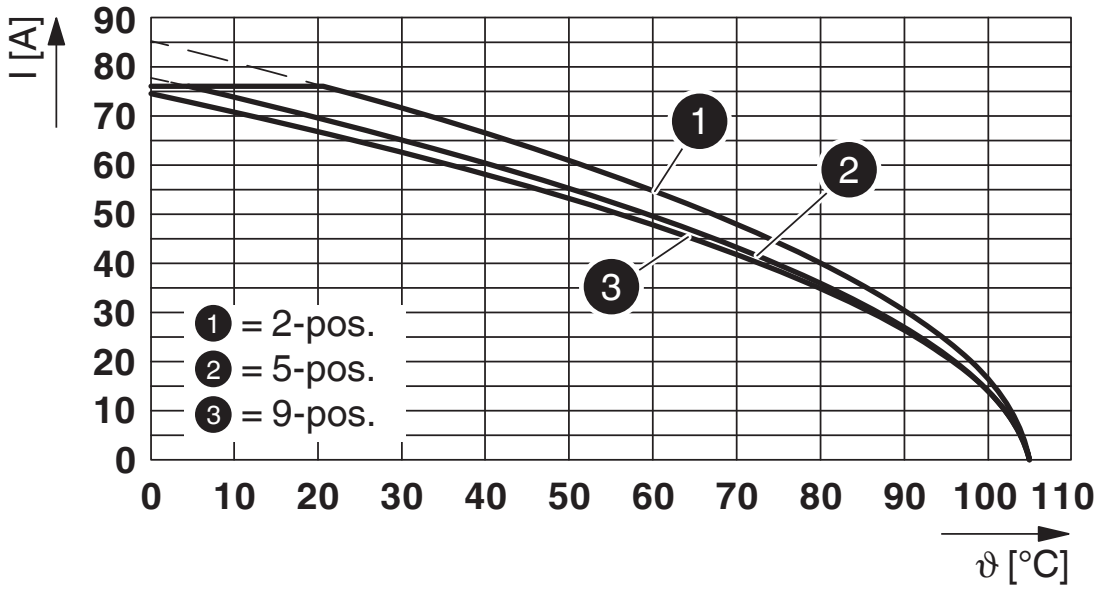

Type: ISPC 16/...-STF-10,16 with IPC 16/...-GF-10,16

Approvals

To download certificates, visit the product detail page: https://www.phoenixcontact.com/us/products/1969632

cULus Recognized
Approval ID: E60425-20040202

	Nominal voltage U_N	Nominal current I_N	Cross section AWG	Cross section mm^2
B				
	300 V	66 A	-	-
C				
	300 V	66 A	-	-
D				
	600 V	5 A	-	-

VDE approval of drawings
Approval ID: 40055586

	Nominal voltage U_N	Nominal current I_N	Cross section AWG	Cross section mm^2
keine				
	1000 V	76 A	-	-

Classifications

ECLASS

ECLASS-13.0	27460201
ECLASS-15.0	27460201

ETIM

ETIM 10.0	EC002637

UNSPSC

UNSPSC 21.0	39121400

Environmental product compliance

EU RoHS

Fulfills EU RoHS substance requirements	Yes, No exemptions

China RoHS

Environment friendly use period (EFUP)	EFUP-E
	No hazardous substances above the limits

EU REACH SVHC

REACH candidate substance (CAS No.)	No substance above 0.1 wt%

EF3.1 Climate Change

CO2e kg	0.153 kg CO2e

Phoenix Contact 2026 © - all rights reserved
https://www.phoenixcontact.com

Phoenix Contact USA
586 Fulling Mill Road
Middletown, PA 17057, United States
(+717) 944-1300
info@phoenixcon.com