IPC 16/ 6-STF-10,16 - PCB connector

1969496

https://www.phoenixcontact.com/us/products/1969496

Please be informed that the data shown in this PDF document is generated from our online catalog. Please find the complete data in the user documentation. Our general terms of use for downloads are valid.





PCB connector, nominal cross section: 16 mm^2, color: green, nominal current: 76 A, rated voltage (III/2): 1000 V, contact surface: Ag, contact connection type: Pin, number of potentials: 6, number of rows: 1, number of positions: 6, number of connections: 6, product range: IPC 16/..-STF, pitch: 10.16 mm, connection method: Screw connection with tension sleeve, screw head form: L Slotted, conductor/PCB connection direction: 0 °, locking clip: - without locking clip, plug-in system: COMBICON PC 16, locking: Screw locking mechanism, mounting method: Screw flange, type of packaging: packed in cardboard

Your advantages

- Well-known connection principle allows worldwide use
- Low temperature rise, thanks to maximum contact force
- Allows connection of two conductors
- Inverted connector with pin contacts for touch-proof device outputs or free-hanging cable/cable connections
- Screwable flange for superior mechanical stability

Commercial data

Item number	1969496
Packing unit	25 pc
Minimum order quantity	50 pc
Sales key	AA05
Product key	AAEABB
GTIN	4017918943738
Weight per piece (including packing)	62.24 g
Weight per piece (excluding packing)	58.874 g
Customs tariff number	85366990
Country of origin	PL

Technical data

Product properties

Product type	PCB connector
Product family	IPC 16/..-STF
Product line	COMBICON Connectors XL
Type	Inverted
Number of positions	6
Pitch	10.16 mm
Number of connections	6
Number of rows	1
Number of potentials	6
Mounting type	Screw flange

Fitting of components

Partial assembly	No

Electrical properties

Properties

Nominal current I_N	76 A
Nominal voltage U_N	1000 V
Contact resistance	0.3 mΩ
Rated voltage (III/3)	1000 V
Rated surge voltage (III/3)	8 kV
Rated voltage (III/2)	1000 V
Rated surge voltage (III/2)	8 kV
Rated voltage (II/2)	1000 V
Rated surge voltage (II/2)	6 kV

Connection data

Connection technology

Type	Inverted
Connector system	COMBICON PC 16
Nominal cross section	16 mm²
Contact connection type	Pin

Interlock

Locking type	Screw locking mechanism
Mounting type	Screw flange
Tightening torque	0.3 Nm

Conductor connection

Connection method	Screw connection with tension sleeve
Conductor/PCB connection direction	0 °

Conductor cross-section rigid	0.75 mm² ... 16 mm²
Conductor cross-section flexible	0.75 mm² ... 16 mm²
Conductor cross-section AWG	18 ... 6
Conductor cross-section, flexible, with ferrule, without plastic sleeve	0.5 mm² ... 16 mm²
Conductor cross-section, flexible, with ferrule, with plastic sleeve	0.5 mm² ... 10 mm²
2 conductors with same cross section, rigid	0.75 mm² ... 6 mm²
2 conductors with same cross section, flexible	0.75 mm² ... 6 mm²
2 conductors with same cross section, flexible, with ferrule without plastic sleeve	0.5 mm² ... 4 mm²
2 conductors with the same cross section, flexible, with TWIN ferrule with plastic sleeve	0.5 mm² ... 6 mm²
Cylindrical gauge a x b / diameter	- / 5.4 mm
Stripping length	12 mm
Drive form screw head	Slotted (L)
Tightening torque	1.7 Nm ... 1.8 Nm

Material specifications

Material data - contact

Note	WEEE/RoHS-compliant, free of whiskers according to IEC 60068-2-82/JEDEC JESD 201
Contact material	Cu alloy
Surface characteristics	completely silver-plated
Metal surface terminal point (top layer)	Silver (4 µm - 8 µm Ag)
Metal surface contact area (top layer)	Silver (4 µm - 8 µm Ag)

Material data - housing

Color (Housing)	green (6021)
Insulating material	PA
Insulating material group	I
CTI according to IEC 60112	600
Flammability rating according to UL 94	V0
Glow wire flammability index GWFI according to EN 60695-2-12	850
Glow wire ignition temperature GWIT according to EN 60695-2-13	775
Temperature for the ball pressure test according to EN 60695-10-2	125 °C

Dimensions

Dimensional drawing	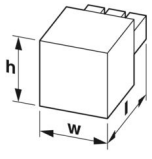
Pitch	10.16 mm

Width [w]	78.72 mm
Height [h]	27.8 mm
Length [l]	44.1 mm

Mounting

Flange

Tightening torque	0.3 Nm

Notes

Notes on operation	In accordance with IEC 61984, COMBICON connectors have no switching power (COC). During designated use, they must not be plugged in or disconnected when carrying voltage or under load.

Mechanical tests

Test for conductor damage and slackening

Specification	IEC 60999-1:1999-11
Result	Test passed

Pull-out test

Specification	IEC 60999-1:1999-11
Conductor cross-section/conductor type/tractive force setpoint/actual value	0.75 mm² / solid / > 30 N
	0.75 mm² / flexible / > 30 N
	16 mm² / solid / > 100 N
	16 mm² / flexible / > 100 N

Insertion and withdrawal forces

Specification	IEC 60512-13-2:2006-02
Result	Test passed
No. of cycles	50
Insertion strength per pos. approx.	12 N
Withdraw strength per pos. approx.	11 N

Torque test

Specification	IEC 60999-1:1999-11

Resistance of inscriptions

Specification	IEC 60068-2-70:1995-12
Result	Test passed

Polarization and coding

Specification	IEC 60512-13-5:2006-02
Result	Test passed

Visual inspection

Specification	IEC 60512-1-1:2002-02
Result	Test passed

Dimension check

Specification	IEC 60512-1-2:2002-02
Result	Test passed

Environmental and real-life conditions

Durability test

Specification	IEC 60512-9-1:2010-03
Impulse withstand voltage at sea level	9.8 kV
Contact resistance R_1	0.3 mΩ
Contact resistance R_2	0.3 mΩ
Insertion/withdrawal cycles	50
Insulation resistance, neighboring positions	> 5 MΩ

Climatic test

Specification	ISO 6988:1985-02
Corrosive stress	0.2 dm^3 SO_2 on 300 dm^3/40 °C/1 cycle
Thermal stress	105 °C/168 h
Power-frequency withstand voltage	4.26 kV

Vibration test

Specification	IEC 60068-2-6:2007-12
Frequency	10 - 150 - 10 Hz
Sweep speed	1 octave/min
Amplitude	0.35 mm (10 Hz ... 60.1 Hz)
Acceleration	5g (60.1 Hz ... 150 Hz)
Test duration per axis	2.5 h
Test directions	X-, Y- and Z-axis

Shocks

Specification	IEC 60068-2-27:2008-02
Pulse shape	Semi-sinusoidal
Acceleration	30g
Shock duration	18 ms
Test directions	X-, Y- and Z-axis (pos. and neg.)

Railway application: Shocks

Acceleration	30g
Shock duration	18 ms
Test directions	X-, Y- and Z-axis (pos. and neg.)

Ambient conditions

Ambient temperature (storage/transport)	-40 °C ... 70 °C
Relative humidity (storage/transport)	30 % ... 70 %
Ambient temperature (assembly)	-5 °C ... 100 °C
Ambient temperature (operation)	-40 °C ... 105 °C (dependent on the derating curve)

Electrical tests

Thermal test | Test group C

Specification	IEC 60512-5-1:2002-02
Tested number of positions	9

Insulation resistance

Specification	IEC 60512-3-1:2002-02
Insulation resistance, neighboring positions	> 5 MΩ

Air clearances and creepage distances | 1. Insulation coordination

Specification	IEC 61984:2008-10
Insulating material group	I
Comparative tracking index (IEC 60112)	CTI 600
Rated insulation voltage (III/3)	1000 V
Rated surge voltage (III/3)	8 kV
minimum clearance value - non-homogenous field (III/3)	8 mm
minimum creepage distance (III/3)	12.5 mm
Rated insulation voltage (III/2)	1000 V
Rated surge voltage (III/2)	8 kV
minimum clearance value - non-homogenous field (III/2)	8 mm
minimum creepage distance (III/2)	8 mm
Rated insulation voltage (II/2)	1000 V
Rated surge voltage (II/2)	6 kV
minimum clearance value - non-homogenous field (II/2)	5.5 mm
minimum creepage distance (II/2)	5.5 mm

Air clearances and creepage distances | 2. Insulation coordination

Specification	IEC 60664-1:2020-05
Insulating material group	I
Comparative tracking index (IEC 60112)	CTI 600
Rated insulation voltage (III/3)	1000 V AC/DC
Rated surge voltage (III/3)	8 kV
minimum clearance value - non-homogenous field (III/3)	8 mm
minimum creepage distance (III/3)	12.5 mm
Rated insulation voltage (III/2)	1250 V DC
Rated surge voltage (III/2)	8 kV
minimum clearance value - non-homogenous field (III/2)	8 mm
minimum creepage distance (III/2)	8 mm
Rated insulation voltage (II/2)	1500 V DC
Rated surge voltage (II/2)	8 kV
minimum clearance value - non-homogenous field (II/2)	8 mm
minimum creepage distance (II/2)	8 mm

Packaging specifications

Type of packaging	packed in cardboard

Drawings

Dimensional drawing

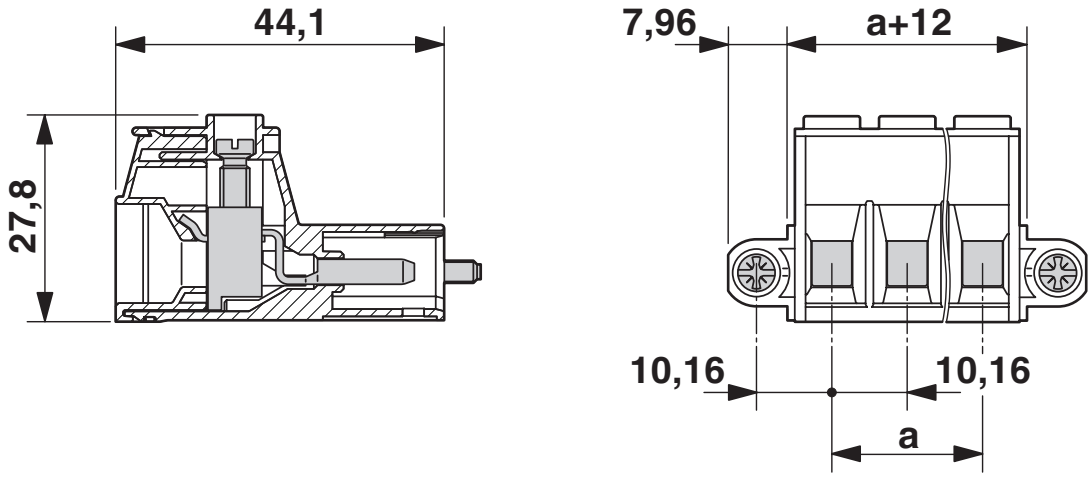

The figure shows the 3-pos. version

Diagram

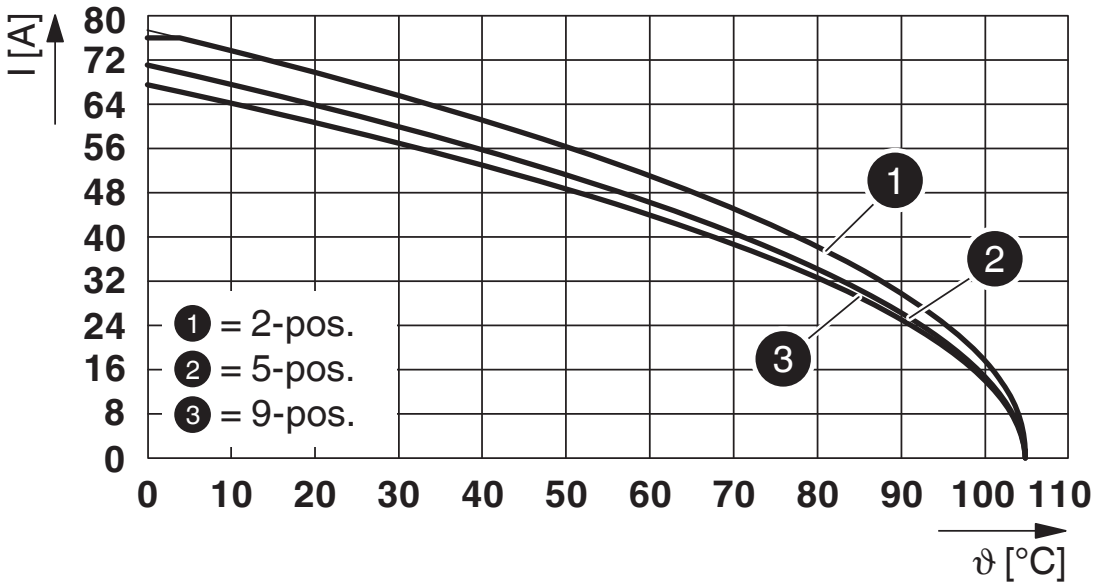

Type: IPC 16/...-STF-10,16 with IPC 16/...-GF-10,16

Diagram

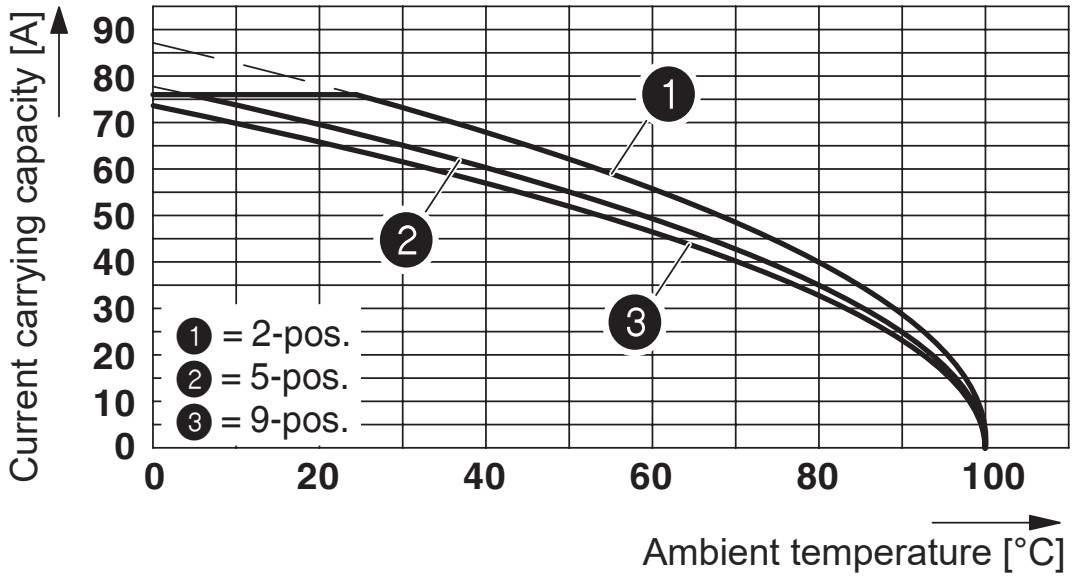

Type: IPC 16/...-STF-10,16 with DFK-IPC 16/...-GF-10,16

Diagram

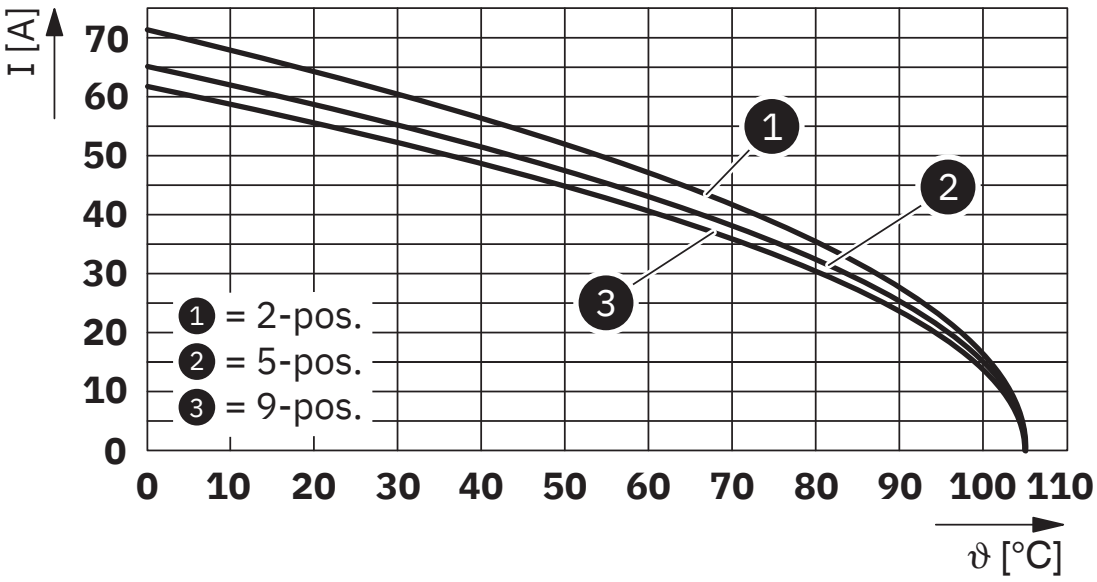

Type: IPC 16/...-STF-10,16 with IPCV 16/...-GF-10,16

Diagram

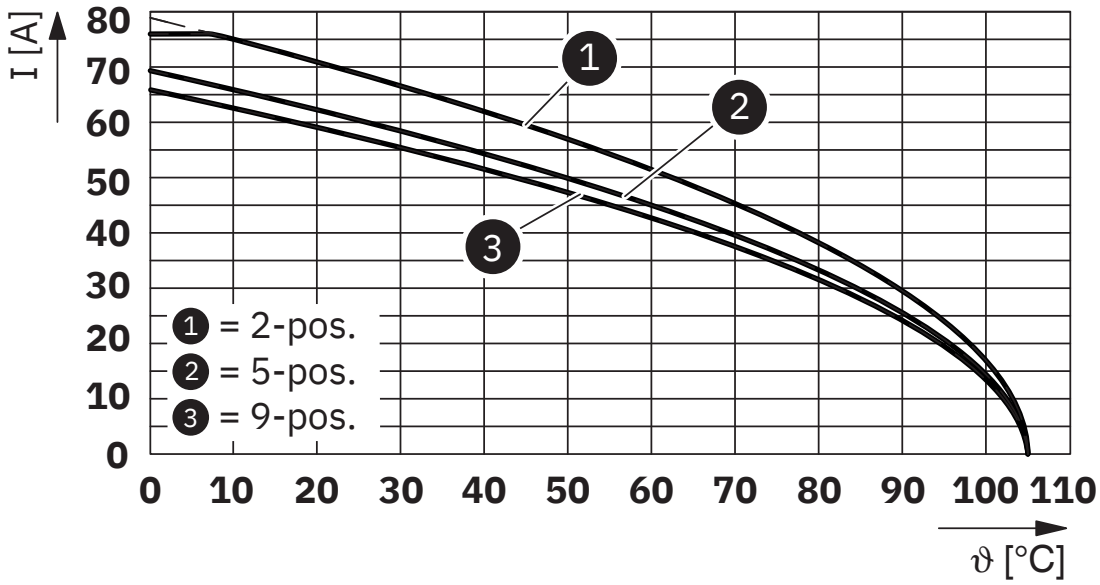

Type: IPC 16/...-STF-10,16 with IPC 16/...-GFU-10,16

Approvals

To download certificates, visit the product detail page: https://www.phoenixcontact.com/us/products/1969496

cULus Recognized
Approval ID: E60425-20040202

	Nominal voltage U_N	Nominal current I_N	Cross section AWG	Cross section mm^2
B				
	600 V	55 A	20 - 6	-
C				
	600 V	55 A	20 - 6	-

VDE approval of drawings
Approval ID: 40055586

	Nominal voltage U_N	Nominal current I_N	Cross section AWG	Cross section mm^2
keine				
	1000 V	76 A	-	0.75 - 16

Classifications

ECLASS

ECLASS-13.0	27460202
ECLASS-15.0	27460202

ETIM

ETIM 10.0	EC002638

UNSPSC

UNSPSC 21.0	39121400

Environmental product compliance

EU RoHS

Fulfills EU RoHS substance requirements	Yes, No exemptions

China RoHS

Environment friendly use period (EFUP)	EFUP-E
	No hazardous substances above the limits

EU REACH SVHC

REACH candidate substance (CAS No.)	No substance above 0.1 wt%

EF3.1 Climate Change

CO2e kg	0.696 kg CO2e

Phoenix Contact 2026 © - all rights reserved
https://www.phoenixcontact.com

Phoenix Contact USA
586 Fulling Mill Road
Middletown, PA 17057, United States
(+717) 944-1300
info@phoenixcon.com