MCDN 1,5/13-G1-3,5 P26THR - PCB header

1953826

https://www.phoenixcontact.com/us/products/1953826

Please be informed that the data shown in this PDF document is generated from our online catalog. Please find the complete data in the user documentation. Our general terms of use for downloads are valid.



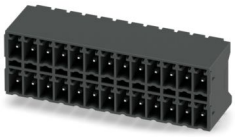

The figure shows a 10-pos. version with 20 contacts

PCB headers, nominal cross section: 1.5 mm^2, color: black, nominal current: 8 A, rated voltage (III/2): 160 V, contact surface: Sn, contact connection type: Pin, number of potentials: 26, number of rows: 2, number of positions: 13, number of connections: 26, product range: MCDN 1,5/..-G1-THR, pitch: 3.5 mm, mounting: THR soldering / wave soldering, pin layout: Linear pinning, solder pin [P]: 2.6 mm, number of solder pins per potential: 1, plug-in system: COMBICON FMC 1,5 - MCDN 1,5, Pin connector pattern alignment: Standard, locking: without, mounting method: without, type of packaging: packed in cardboard, The pin length is 2.6 mm. User information and design recommendations on Through Hole Reflow Technology can be found at: "Downloads"

Your advantages

- Designed for integration into the SMT soldering process
- Maximum flexibility when it comes to device design – one header for connectors with different connection technologies
- Conductor connection on several levels enables higher contact density

Commercial data

Item number	1953826
Packing unit	50 pc
Minimum order quantity	50 pc
Note	Made to order (non-returnable)
Sales key	AA02
Product key	AABTGB
GTIN	4017918919351
Weight per piece (including packing)	10.284 g
Weight per piece (excluding packing)	8.567 g
Customs tariff number	85366930
Country of origin	DE

Technical data

Product properties

Product type	PCB headers
Product family	MCDN 1,5/..-G1-THR
Product line	COMBICON Connectors S
Type	Component suitable for through hole reflow
Number of positions	13
Pitch	3.5 mm
Number of connections	26
Number of rows	2
Number of potentials	26
Mounting type	without
Pin layout	Linear pinning
Solder pins per potential	1

Fitting of components

Partial assembly	No

Electrical properties

Properties

Nominal current I_N	8 A
Nominal voltage U_N	160 V
Contact resistance	2.1 mΩ
Rated voltage (III/3)	160 V
Rated surge voltage (III/3)	2.5 kV
Rated voltage (III/2)	160 V
Rated surge voltage (III/2)	2.5 kV
Rated voltage (II/2)	250 V
Rated surge voltage (II/2)	2.5 kV

Mounting

Mounting type	THR soldering / wave soldering
Pin layout	Linear pinning

Processing notes

Process	Reflow/wave soldering
Moisture Sensitive Level	MSL 1
Classification temperature T_c	260 °C
Solder cycles in the reflow	3

Material specifications

Material data - contact

Note	WEEE/RoHS-compliant, free of whiskers according to IEC 60068-2-82/JEDEC JESD 201
Contact material	Cu alloy
Surface characteristics	Tin-plated
Metal surface contact area (top layer)	Tin (3 µm - 5 µm Sn)
Metal surface contact area (middle layer)	Nickel (1.3 µm - 3 µm Ni)
Metal surface soldering area (top layer)	Tin (3 µm - 5 µm Sn)
Metal surface soldering area (middle layer)	Nickel (1.3 µm - 3 µm Ni)

Material data - housing

Color (Housing)	black (9005)
Insulating material	LCP
Insulating material group	IIIa
CTI according to IEC 60112	175
Flammability rating according to UL 94	V0

Notes

Details for soldering processes	Processing using reflow processes in compliance with IEC 60068-2-58 or DIN EN 61760-1 (latest version) Moisture Sensitive Level (MSL) = 1 according to IPC/JEDEC J-STD-020-C

Dimensions

Dimensional drawing	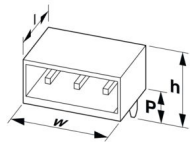
Pitch	3.5 mm
Width [w]	47 mm
Height [h]	17.8 mm
Length [l]	13.3 mm
Installed height	15.2 mm
Solder pin length [P]	2.6 mm
Pin dimensions	0.8 x 0.8 mm

PCB design

Pin spacing	3.50 mm
Hole diameter	1.4 mm

Mechanical tests

Visual inspection

Specification	IEC 60512-1-1:2002-02
Result	Test passed

Dimension check

Specification	IEC 60512-1-2:2002-02
Result	Test passed

Resistance of inscriptions

Specification	IEC 60068-2-70:1995-12
Result	Test passed

Polarization and coding

Specification	IEC 60512-13-5:2006-02
Result	Test passed

Contact holder in insert

Specification	IEC 60512-15-1:2008-05
Contact holder in insert Requirements >20 N	Test passed

Insertion and withdrawal forces

Specification	IEC 60512-13-2:2006-02
Result	Test passed
No. of cycles	25
Insertion strength per pos. approx.	9 N
Withdraw strength per pos. approx.	6 N

Electrical tests

Thermal test | Test group C

Specification	IEC 60512-5-1:2002-02
Tested number of positions	20

Insulation resistance

Specification	IEC 60512-3-1:2002-02
Insulation resistance, neighboring positions	> 5 MΩ

Air clearances and creepage distances |

Specification	IEC 60664-1:2007-04
Insulating material group	IIIa
Comparative tracking index (IEC 60112)	CTI 175
Rated insulation voltage (III/3)	160 V
Rated surge voltage (III/3)	2.5 kV
minimum clearance value - non-homogenous field (III/3)	1.5 mm
minimum creepage distance (III/3)	2.5 mm
Rated insulation voltage (III/2)	160 V
Rated surge voltage (III/2)	2.5 kV
minimum clearance value - non-homogenous field (III/2)	1.5 mm
minimum creepage distance (III/2)	1.6 mm
Rated insulation voltage (II/2)	250 V
Rated surge voltage (II/2)	2.5 kV
minimum clearance value - non-homogenous field (II/2)	1.5 mm

minimum creepage distance (II/2)	2.5 mm

Environmental and real-life conditions

Durability test

Specification	IEC 60512-9-1:2010-03
Impulse withstand voltage at sea level	2.95 kV
Contact resistance R_1	2.1 mΩ
Contact resistance R_2	2.4 mΩ
Insertion/withdrawal cycles	25
Insulation resistance, neighboring positions	> 5 MΩ

Climatic test

Specification	ISO 6988:1985-02
Corrosive stress	0.2 dm^3 SO_2 on 300 dm^3/40 °C/1 cycle
Thermal stress	100 °C/168 h
Power-frequency withstand voltage	1.39 kV

Vibration test

Specification	IEC 60068-2-6:2007-12
Frequency	10 - 150 - 10 Hz
Sweep speed	1 octave/min
Amplitude	0.35 mm (10 Hz ... 60.1 Hz)
Acceleration	5g (60.1 Hz ... 150 Hz)
Test duration per axis	2.5 h
Test directions	X-, Y- and Z-axis

Ambient conditions

Ambient temperature (storage/transport)	-40 °C ... 70 °C
Relative humidity (storage/transport)	30 % ... 70 %
Ambient temperature (assembly)	-5 °C ... 100 °C
Ambient temperature (operation)	-40 °C ... 100 °C (dependent on the derating curve)

Packaging specifications

Type of packaging	packed in cardboard

Drawings

Dimensional drawing

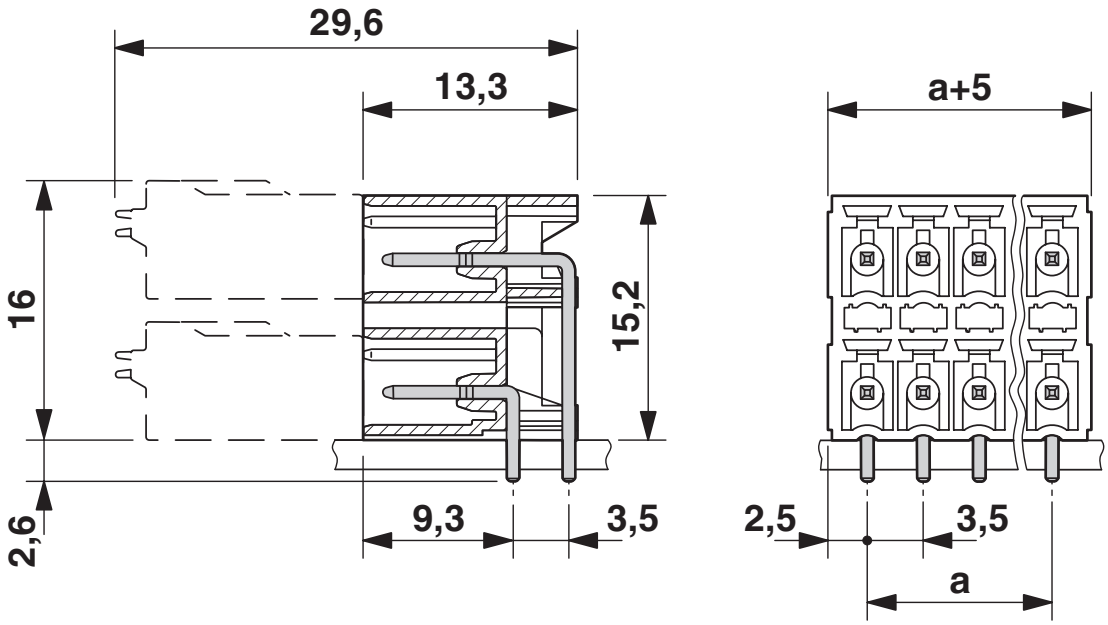

Diagram

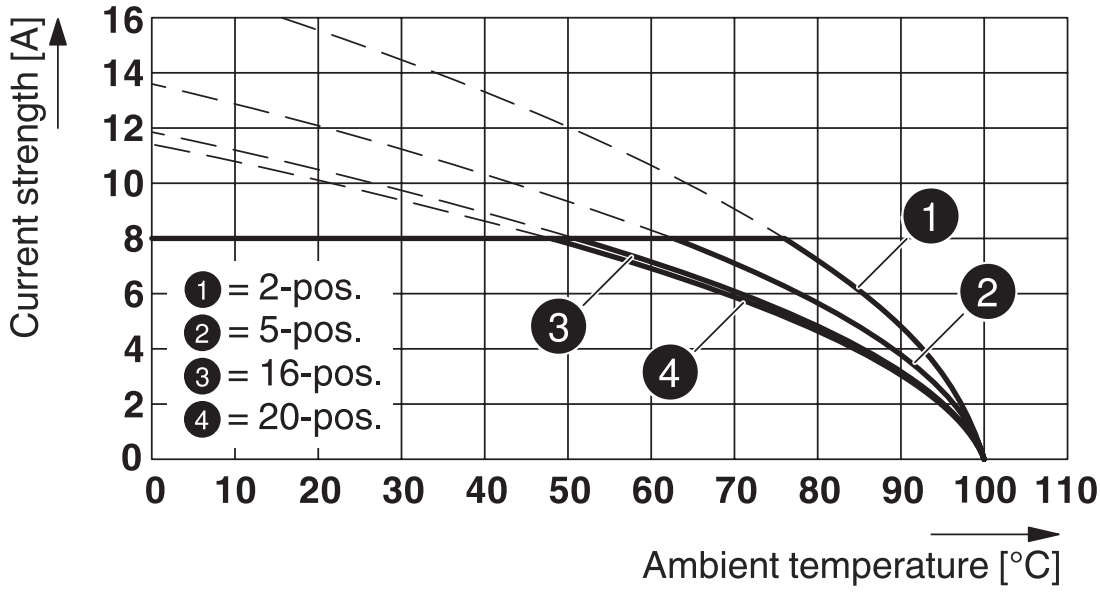

Type: FMC 1,5/...-ST-3,5 with MCDN 1,5/...-G1-3,5 P26THR

Diagram

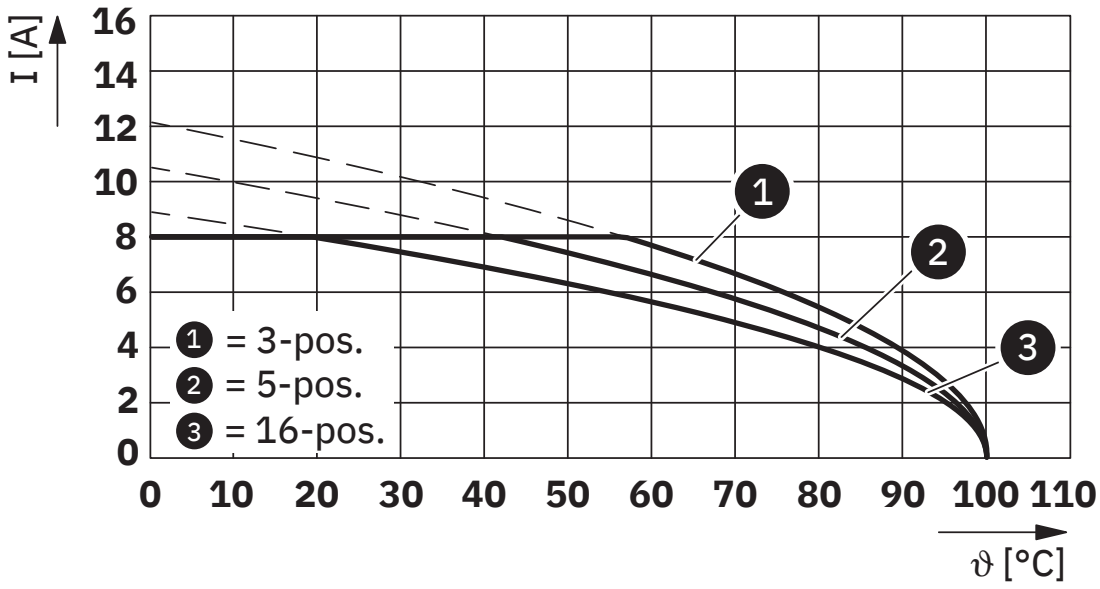

Type: FMCD 1,5/...-ST-3,5 with MCDN 1,5/...-G1-3,5 P...THR

Drilling plan/solder pad geometry

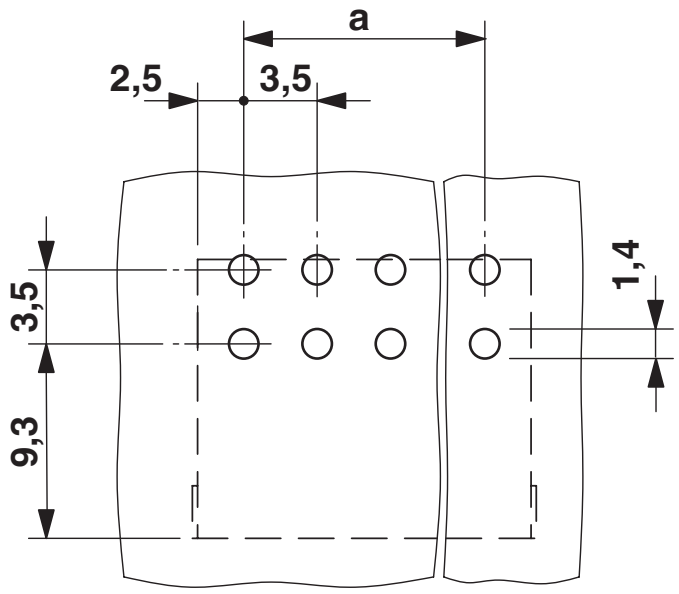

*) ≤ 8-pos. = 1.3 / > 8-pos. = 1.4

Approvals

To download certificates, visit the product detail page: https://www.phoenixcontact.com/us/products/1953826

cULus Recognized
Approval ID: E60425-20110128

	Nominal voltage U_N	Nominal current I_N	Cross section AWG	Cross section mm^2
B				
	150 V	8 A	-	-
D				
	150 V	8 A	-	-

VDE Zeichengenehmigung
Approval ID: 40011723

	Nominal voltage U_N	Nominal current I_N	Cross section AWG	Cross section mm^2
keine				
	160 V	8 A	-	-

Classifications

ECLASS

ECLASS-13.0	27460201
ECLASS-15.0	27460201

ETIM

ETIM 10.0	EC002637

UNSPSC

UNSPSC 21.0	39121400

Environmental product compliance

EU RoHS

Fulfills EU RoHS substance requirements	Yes, No exemptions

China RoHS

Environment friendly use period (EFUP)	EFUP-E
	No hazardous substances above the limits

EU REACH SVHC

REACH candidate substance (CAS No.)	No substance above 0.1 wt%

Phoenix Contact 2026 © - all rights reserved
https://www.phoenixcontact.com

Phoenix Contact USA
586 Fulling Mill Road
Middletown, PA 17057, United States
(+717) 944-1300
info@phoenixcon.com