FK-MPT 0,5/ 5-3,5 - PCB terminal block

1891098

https://www.phoenixcontact.com/us/products/1891098

Please be informed that the data shown in this PDF document is generated from our online catalog. Please find the complete data in the user documentation. Our general terms of use for downloads are valid.



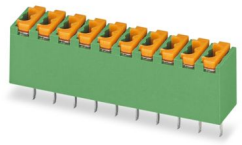

The figure shows a 10-position version of the product

PCB terminal block, nominal current: 4 A, rated voltage (III/2): 250 V, nominal cross section: 0.5 mm^2, number of potentials: 5, number of rows: 1, number of positions per row: 5, product range: FK-MPT 0,5/..-V, pitch: 3.5 mm, connection method: Push-in spring connection, mounting: Wave soldering, conductor/PCB connection direction: 90 °, color: green, Pin layout: Linear pinning, Solder pin [P]: 3.5 mm, number of solder pins per potential: 1, type of packaging: packed in cardboard

Your advantages

- Time saving push-in connection, tools not required
- Defined contact force ensures that contact remains stable over the long term
- Intuitive operation due to color-coded actuating push button
- Potentials can be easily looped through – ideal for BUS applications
- Small component size for applications where space is at a premium
- Vertical connection enables multi-row arrangement on the PCB

Commercial data

Item number	1891098
Packing unit	50 pc
Minimum order quantity	50 pc
Sales key	AA11
Product key	AAKBCB
GTIN	4017918169619
Weight per piece (including packing)	2.14 g
Weight per piece (excluding packing)	1.73 g
Customs tariff number	85369010
Country of origin	IN

Technical data

Product properties

Product type	PCB terminal block
Product family	FK-MPT 0,5/..-V
Product line	COMBICON Terminals XS
Type	PC termination block
Number of positions	5
Pitch	3.5 mm
Number of connections	10
Number of rows	1
Number of potentials	5
Mounting type	without
Pin layout	Linear pinning
Solder pins per potential	1

Fitting of components

Partial assembly	No

Electrical properties

Properties

Nominal current I_N	4 A
Nominal voltage U_N	250 V
Rated voltage (III/3)	160 V
Rated surge voltage (III/3)	2.5 kV
Rated voltage (III/2)	250 V
Rated surge voltage (III/2)	2.5 kV
Rated voltage (II/2)	250 V
Rated surge voltage (II/2)	2.5 kV

Connection data

Conductor connection

Connection method	Push-in spring connection
Conductor cross-section rigid	0.12 mm² ... 0.5 mm²
Conductor cross-section AWG	26 ... 20
Stripping length	6.5 mm

Mounting

Mounting type	Wave soldering
Pin layout	Linear pinning

Material specifications

Material data - contact

Note	WEEE/RoHS-compliant, free of whiskers according to IEC 60068-2-82/JEDEC JESD 201
Contact material	Steel/copper
Surface characteristics	Tin-plated
Metal surface terminal point (top layer)	Tin (5 µm - 7 µm Sn)
Metal surface terminal point (middle layer)	Copper (2 µm - 3 µm Cu)
Metal surface soldering area (top layer)	Tin (5 µm - 7 µm Sn)
Metal surface soldering area (middle layer)	Copper (2 µm - 3 µm Cu)

Material data - housing

Color (Housing)	green (6021)
Insulating material	PBT
Insulating material group	IIIa
CTI according to IEC 60112	225
Flammability rating according to UL 94	V0

Material data – actuating element

Color (Actuating element)	orange (2003)
Insulating material	POM
Insulating material group	I
CTI according to IEC 60112	600
Flammability rating according to UL 94	HB

Dimensions

Dimensional drawing	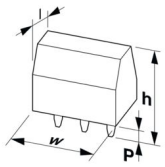
Pitch	3.5 mm
Width [w]	18 mm
Height [h]	13 mm
Length [l]	7 mm
Installed height	9.5 mm
Solder pin length [P]	3.5 mm
Pin dimensions	0.35 x 0.9 mm

PCB design

Hole diameter	1 mm

Mechanical tests

Test for conductor damage and slackening

Specification	IEC 60999-1:1990-05
Result	Test passed

Pull-out test

Specification	IEC 60999-1:1990-05
Conductor cross-section/conductor type/tractive force setpoint/actual value	0.14 mm² / solid / > 10 N
	0.5 mm² / solid / > 30 N

Electrical tests

Temperature-rise test

Specification	IEC 60998-1:1990-04
Requirement temperature-rise test	Increase in temperature ≤ 45 K

Insulation resistance

Specification	IEC 60512-2:1985-00
Insulation resistance, neighboring positions	10^{12} Ω

Air clearances and creepage distances |

Specification	IEC 60664-1:2007-04
Insulating material group	IIIa
Comparative tracking index (IEC 60112)	CTI 225
Rated insulation voltage (III/3)	160 V
Rated surge voltage (III/3)	2.5 kV
minimum clearance value - non-homogenous field (III/3)	1.5 mm
minimum creepage distance (III/3)	2.5 mm
Rated insulation voltage (III/2)	250 V
Rated surge voltage (III/2)	2.5 kV
minimum clearance value - non-homogenous field (III/2)	1.5 mm
minimum creepage distance (III/2)	2.5 mm
Rated insulation voltage (II/2)	250 V
Rated surge voltage (II/2)	2.5 kV
minimum clearance value - non-homogenous field (II/2)	1.5 mm
minimum creepage distance (II/2)	2.5 mm

Environmental and real-life conditions

Vibration test

Specification	IEC 60068-2-6:1995-03
Frequency	10 - 150 - 10 Hz
Sweep speed	1 octave/min
Amplitude	0.35 mm (10 Hz ... 60.1 Hz)
Acceleration	5g (60.1 Hz ... 150 Hz)
Test duration per axis	2.5 h
Test directions	X-, Y- and Z-axis

Ambient conditions

Ambient temperature (storage/transport)	-40 °C ... 70 °C
Relative humidity (storage/transport)	30 % ... 70 %

Ambient temperature (assembly)	-5 °C ... 100 °C
Ambient temperature (operation)	-40 °C ... 100 °C (Depending on the current carrying capacity/derating curve)

Packaging specifications

Type of packaging	packed in cardboard

Drawings

Dimensional drawing

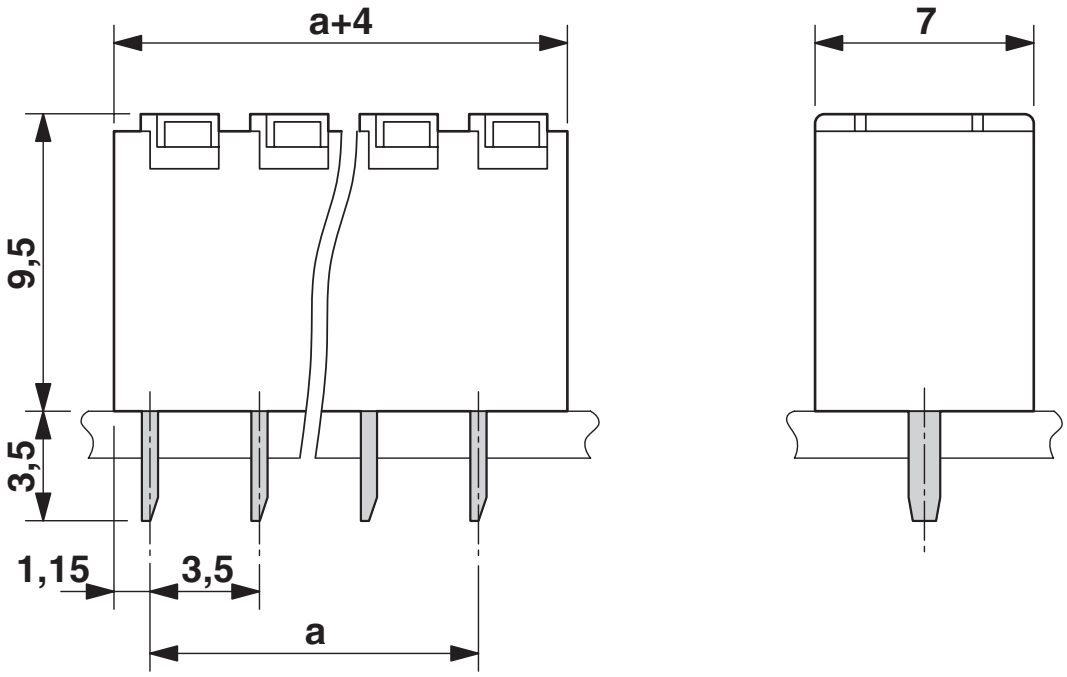

Drilling plan/solder pad geometry

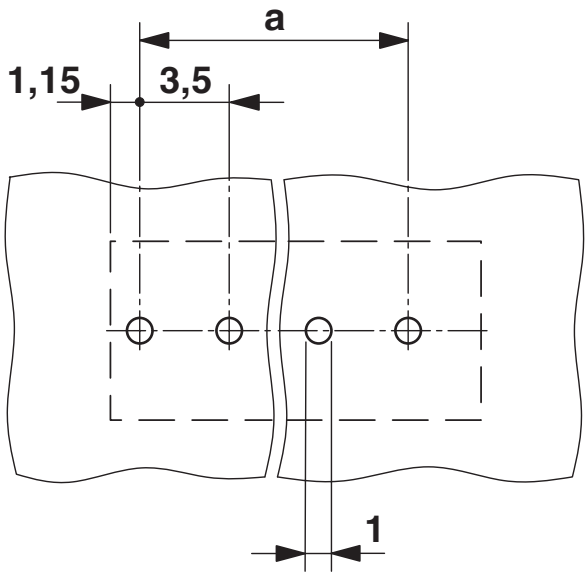

Approvals

To download certificates, visit the product detail page: https://www.phoenixcontact.com/us/products/1891098

cULus Recognized
Approval ID: E60425-19991118

	Nominal voltage U_N	Nominal current I_N	Cross section AWG	Cross section mm^2
B				
	300 V	4 A	28 - 20	-
D				
	300 V	4 A	28 - 20	-

VDE approval of drawings
Approval ID: 40055523

	Nominal voltage U_N	Nominal current I_N	Cross section AWG	Cross section mm^2
keine				
	250 V	4 A	-	0.2 - 0.5

Classifications

ECLASS

ECLASS-13.0	27460101
ECLASS-15.0	27460101

ETIM

ETIM 10.0	EC002643

UNSPSC

UNSPSC 21.0	39121400

Environmental product compliance

EU RoHS

Fulfills EU RoHS substance requirements	Yes, No exemptions

China RoHS

Environment friendly use period (EFUP)	EFUP-E
	No hazardous substances above the limits

EU REACH SVHC

REACH candidate substance (CAS No.)	No substance above 0.1 wt%

EF3.1 Climate Change

CO2e kg	0.062 kg CO2e

Phoenix Contact 2026 © - all rights reserved
https://www.phoenixcontact.com

Phoenix Contact USA
586 Fulling Mill Road
Middletown, PA 17057, United States
(+717) 944-1300
info@phoenixcon.com