VC-MEMV-T2-R-M25 - Sleeve housing

1886605

https://www.phoenixcontact.com/us/products/1886605

Please be informed that the data shown in this PDF document is generated from our online catalog. Please find the complete data in the user documentation. Our general terms of use for downloads are valid.



The figure shows version VC-MEMV-T3-R-M25

Sleeve housing, Range of articles: VARIOCON, design: VC2, color: nickel, When using fiber optics, the bending radii of the cable manufacturers must be observed.

Commercial data

Item number	1886605
Packing unit	5 pc
Minimum order quantity	1 pc
Sales key	AB01
Product key	ABLAAB
GTIN	4017918848026
Weight per piece (including packing)	270.189 g
Weight per piece (excluding packing)	270.189 g
Customs tariff number	85389099
Country of origin	PL

Technical data

Notes

General	When using fiber optics, the bending radii of the cable manufacturers must be observed.

Safety note

Safety note	WARNING: The connectors may not be plugged in or disconnected under load. Ignoring the warning or improper use may damage persons and/or property.
	• WARNING: Commission properly functioning products only. The products must be regularly inspected for damage. Decommission defective products immediately. Replace damaged products. Repairs are not possible.
	• WARNING: Only electrically qualified personnel may install and operate the product. They must observe the following safety notes. The qualified personnel must be familiar with the basics of electrical engineering. They must be able to recognize and prevent danger. The relevant symbol on the packaging indicates that only personnel familiar with electrical engineering are allowed to install and operate the product.
	• The products are suitable for applications in plant, controller, and electrical device engineering.
	• When operating the connectors in outdoor applications, they must be separately protected against environmental influences.
	• Assembled products may not be manipulated or improperly opened.
	• Only use mating connectors that are specified in the technical data of the standards listed (e.g. the ones listed in the product accessories online at phoenixcontact.com/products).
	• When using the product in direct connection with third-party manufacturers, the user is responsible.
	• For operating voltages > 50 V AC, conductive connector housings must be grounded
	• Ensure that the protective or functional ground has been properly connected.
	• VDE 0100/1.97 § 411.1.3.2 and DIN EN 60 204/11.98 § 14.1.3 are applicable when combining several circuits in a cable and/or connector
	• Observe the corresponding technical data. You will find information: o On the product o On the packing label o In the supplied documentation o Online at phoenixcontact.com/products under the product
	• Only use tools recommended by Phoenix Contact
	• The installation notes/Design In documents online on the download page at phoenixcontact.com/products must be observed for this product.
	• Use a protective cap to protect connectors that are not in use. The suitable accessories are available online in the accessory section of the product at phoenixcontact.com/products
	• Operate the connector only when it is fully plugged in.

	• Ensure that when laying the cable, the tensile load on the connectors does not exceed the upper limit specified in the standards.
	• Observe the minimum bending radius of the cable. Lay the cable without twisting it.
	• The connector warms up in normal operation. Depending on the ambient conditions, the surface of the connector can continue to warm up. In this case, the user is responsible for posting warnings (e.g. DIN EN ISO 13732-1:2008-12).

Product properties

Product type	Sleeve housings
Housing type	Sleeve housing
Product family	VARIOCON
Type	VC2
No. of cable outlets	1
Type of the screw connection	M25
Shielded	yes
Cable outlet	slanted

Connection data

Tightening torque	1.2 ... 1.8 Nm

Dimensions

Dimensional drawing	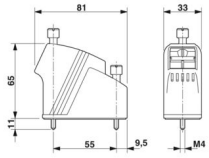
Width	33 mm
Height	65 mm
Length	81 mm

Material specifications

Color	nickel
Color of the housing part	gray
Material Housing	Die-cast zinc
Material	NBR (O-ring)
Material Seal	EPDM, conductive
Flammability rating according to UL 94	V0
Material of locking screw	Brass, nickel-plated

Mechanical properties

Mechanical data

Type of the screw connection	M25

Locking type	Screw

Environmental and real-life conditions

Ambient conditions

Degree of protection	IP67 (IEC 60529)
	IP65/IP66/IP67
Ambient temperature (operation)	-40 °C ... 125 °C

Drawings

Dimensional drawing

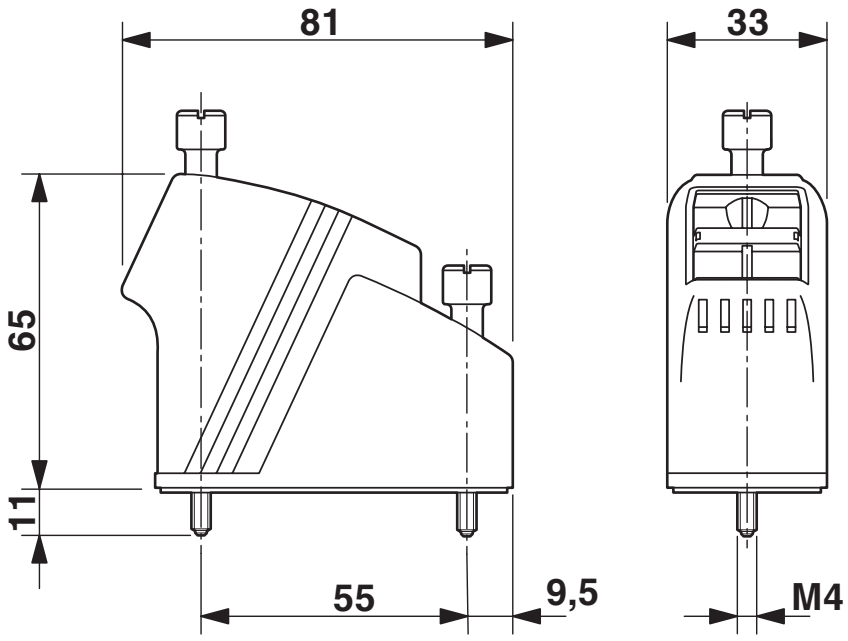

Classifications

ECLASS

ECLASS-13.0	27440202
ECLASS-15.0	27440202

ETIM

ETIM 10.0	EC000437

UNSPSC

UNSPSC 21.0	31261500

Environmental product compliance

EU RoHS

Fulfills EU RoHS substance requirements	Yes, No exemptions

China RoHS

Environment friendly use period (EFUP)	EFUP-E
	No hazardous substances above the limits

EU REACH SVHC

REACH candidate substance (CAS No.)	No substance above 0.1 wt%

EF3.1 Climate Change

CO2e kg	6.004 kg CO2e

Phoenix Contact 2026 © - all rights reserved
https://www.phoenixcontact.com

Phoenix Contact USA
586 Fulling Mill Road
Middletown, PA 17057, United States
(+717) 944-1300
info@phoenixcon.com