ZEC 1,5/ 4-ST-7,5 C2 R1,4 - PCB connector

1883161

https://www.phoenixcontact.com/us/products/1883161

Please be informed that the data shown in this PDF document is generated from our online catalog. Please find the complete data in the user documentation. Our general terms of use for downloads are valid.

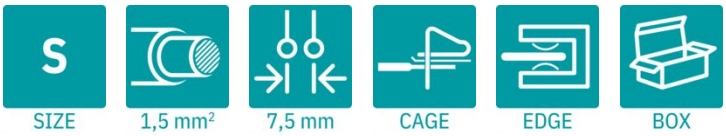



PCB direct plug, nominal cross section: 1.5 mm^2, color: green, nominal current: 10 A, rated voltage (III/2): 630 V, contact surface: Sn, contact connection type: Socket, number of potentials: 4, number of rows: 1, number of positions: 4, number of connections: 4, product range: ZEC 1,5/. .-ST, pitch: 7.5 mm, connection method: Spring-cage connection, mounting: Direct plug-in method, conductor/PCB connection direction: 0 °, plug-in system: ZEC, locking: Snap-in locking, mounting method: Latching flange, type of packaging: packed in cardboard

Your advantages

- Defined contact force ensures that contact remains stable over the long term
- Inexpensive direct plug-in connection with just one component
- Clamping space opened by means of fixed screwdriver enables convenient conductor connection
- Plug-in direction parallel to the PCB

Commercial data

Item number	1883161
Packing unit	50 pc
Minimum order quantity	50 pc
Sales key	AA03
Product key	AACEDA
GTIN	4017918161132
Weight per piece (including packing)	8.384 g
Weight per piece (excluding packing)	7.414 g
Customs tariff number	85366930
Country of origin	GR

Technical data

Product properties

Product type	PCB direct plug
Product family	ZEC 1,5/..-ST
Product line	COMBICON Connectors S
Type	Direct plug connector
Number of positions	4
Pitch	7.5 mm
Number of connections	4
Number of rows	1
Number of potentials	4
Mounting type	without

Fitting of components

Partial assembly	No

Electrical properties

Properties

Nominal current I_N	10 A
Nominal voltage U_N	630 V
Contact resistance	1.2 mΩ
Rated voltage (III/3)	400 V
Rated surge voltage (III/3)	6 kV
Rated voltage (III/2)	630 V
Rated surge voltage (III/2)	6 kV
Rated voltage (II/2)	1000 V
Rated surge voltage (II/2)	6 kV

Connection data

Connection technology

Type	Direct plug connector
Connector system	ZEC
Nominal cross section	1.5 mm²
Contact connection type	Socket

Interlock

Locking type	Snap-in locking
Mounting type	Latching flange

Conductor connection

Connection method	Spring-cage connection
Connection direction of the conductor to plug-in direction	0 °
Conductor cross-section rigid	0.2 mm² ... 1.5 mm²

Conductor cross-section flexible	0.2 mm² ... 1.5 mm²
Conductor cross-section AWG	24 ... 16
Conductor cross-section, flexible, with ferrule, without plastic sleeve	0.25 mm² ... 1.5 mm²
Conductor cross-section, flexible, with ferrule, with plastic sleeve	0.25 mm² ... 1.5 mm²
2 conductors with the same cross section, flexible, with TWIN ferrule with plastic sleeve	0.5 mm² ... 0.5 mm²
Stripping length	7 mm

Specifications for ferrules without insulating collar

recommended crimping tool	1212034 CRIMPFOX 6

Specifications for ferrules with insulating collar

recommended crimping tool	1212034 CRIMPFOX 6

Mounting

Mounting type	Direct plug-in method

Material specifications

Material data - contact

Note	WEEE/RoHS-compliant, free of whiskers according to IEC 60068-2-82/JEDEC JESD 201
Contact material	Cu alloy
Surface characteristics	hot-dip tin-plated
Metal surface terminal point (top layer)	Tin (4 µm - 8 µm Sn)
Metal surface contact area (top layer)	Tin (4 µm - 8 µm Sn)

Material data - housing

Color (Housing)	green (6021)
Insulating material	PA
Insulating material group	I
CTI according to IEC 60112	600
Flammability rating according to UL 94	V0
Glow wire flammability index GWFI according to EN 60695-2-12	850
Glow wire ignition temperature GWIT according to EN 60695-2-13	775
Temperature for the ball pressure test according to EN 60695-10-2	125 °C

Notes

Notes on operation	In accordance with IEC 61984, COMBICON connectors have no switching power (COC). During designated use, they must not be plugged in or disconnected when carrying voltage or under load.

Dimensions

Dimensional drawing	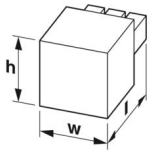
Pitch	7.5 mm
Width [w]	38.9 mm
Height [h]	17.5 mm
Length [l]	24.05 mm
Installed height	18 mm

Mechanical tests

Test for conductor damage and slackening

Specification	IEC 60999-1:1990-05
Result	Test passed

Repeated connection and disconnection

Specification	IEC 60999-1:1990-05
Result	Test passed

Pull-out test

Specification	IEC 60999-1:1990-05
Conductor cross-section/conductor type/tractive force setpoint/actual value	0.2 mm² / solid / > 10 N
	0.2 mm² / flexible / > 10 N
	1.5 mm² / solid / > 40 N
	1.5 mm² / flexible / > 40 N

Insertion and withdrawal forces

Result	Test passed
No. of cycles	20
Insertion strength per pos. approx.	6 N
Withdraw strength per pos. approx.	3 N

Resistance of inscriptions

Specification	IEC 60068-2-70:1995-12
Result	Test passed

Visual inspection

Specification	IEC 60512-2:1985-00
Result	Test passed

Dimension check

Specification	IEC 60512-2:1985-00
Result	Test passed

Electrical tests

Thermal test | Test group C

Specification	IEC 60512-5-1:2002-02
Tested number of positions	12

Insulation resistance

Specification	IEC 60512-2:1985-00
Insulation resistance, neighboring positions	10^{12} Ω

Air clearances and creepage distances |

Specification	IEC 60664-1:2007-04
Insulating material group	I
Comparative tracking index (IEC 60112)	CTI 600
Rated insulation voltage (III/3)	400 V
Rated surge voltage (III/3)	6 kV
minimum clearance value - non-homogenous field (III/3)	5.5 mm
minimum creepage distance (III/3)	5.5 mm
Rated insulation voltage (III/2)	630 V
Rated surge voltage (III/2)	6 kV
minimum clearance value - non-homogenous field (III/2)	5.5 mm
minimum creepage distance (III/2)	5.5 mm
Rated insulation voltage (II/2)	1000 V
Rated surge voltage (II/2)	6 kV
minimum clearance value - non-homogenous field (II/2)	5.5 mm
minimum creepage distance (II/2)	5.5 mm

Environmental and real-life conditions

Durability test

Specification	IEC 60512-5:1992-08
Contact resistance R_1	1.2 mΩ
Contact resistance R_2	1.5 mΩ
Insertion/withdrawal cycles	20

Climatic test

Specification	ISO 6988:1985-02
Corrosive stress	0.2 dm^3 SO_2 on 300 dm^3/40 °C/1 cycle
Thermal stress	100 °C/168 h
Power-frequency withstand voltage	3.31 kV

Vibration test

Specification	IEC 60068-2-6:1995-03
Frequency	10 - 150 - 10 Hz
Sweep speed	1 octave/min
Amplitude	0.35 mm (10 Hz ... 60.1 Hz)
Acceleration	5g (60.1 Hz ... 150 Hz)
Test duration per axis	2.5 h

Test directions	X-, Y- and Z-axis

Ambient conditions

Ambient temperature (storage/transport)	-40 °C ... 70 °C
Relative humidity (storage/transport)	30 % ... 70 %
Ambient temperature (assembly)	-5 °C ... 100 °C
Ambient temperature (operation)	-40 °C ... 100 °C (dependent on the derating curve)

Ambient conditions

Ambient temperature (operation)	-40 °C ... 100 °C (dependent on the derating curve)
Ambient temperature (storage/transport)	-40 °C ... 70 °C
Relative humidity (storage/transport)	30 % ... 70 %
Ambient temperature (assembly)	-5 °C ... 100 °C

Packaging specifications

Type of packaging	packed in cardboard

Drawings

Diagram

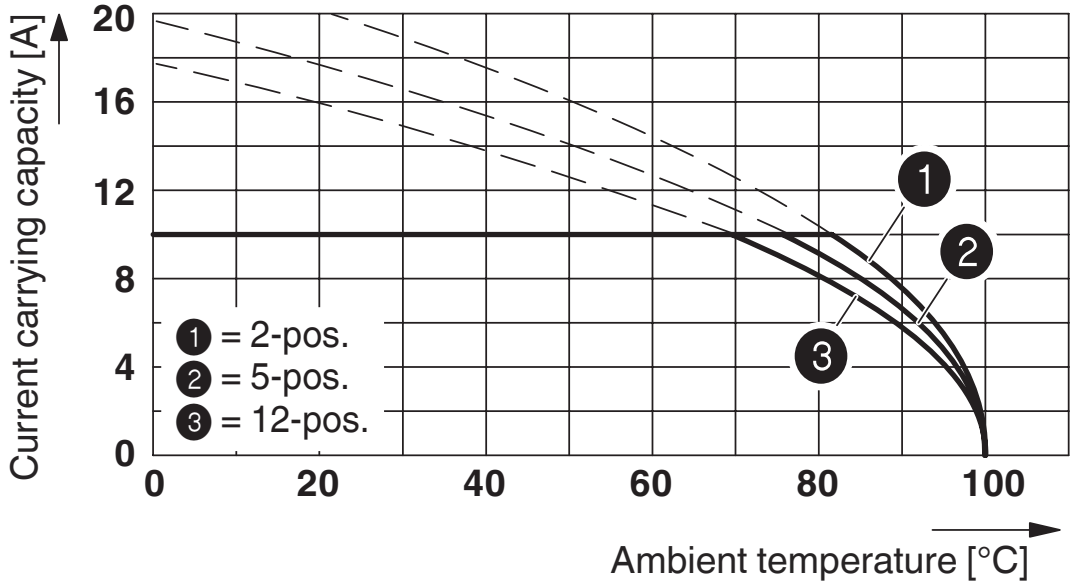

Type: ZEC 1,5/...-ST-7,5

Derating curve, determined as per DIN EN 61984 (VDE 0627):2002-09
Representation based on DIN EN 60512-5-2:2003-01
Connected conductor cross-section = 1.5 mm^2
Reduction factor = 0.8
Number of positions = see diagram

Drilling plan/solder pad geometry

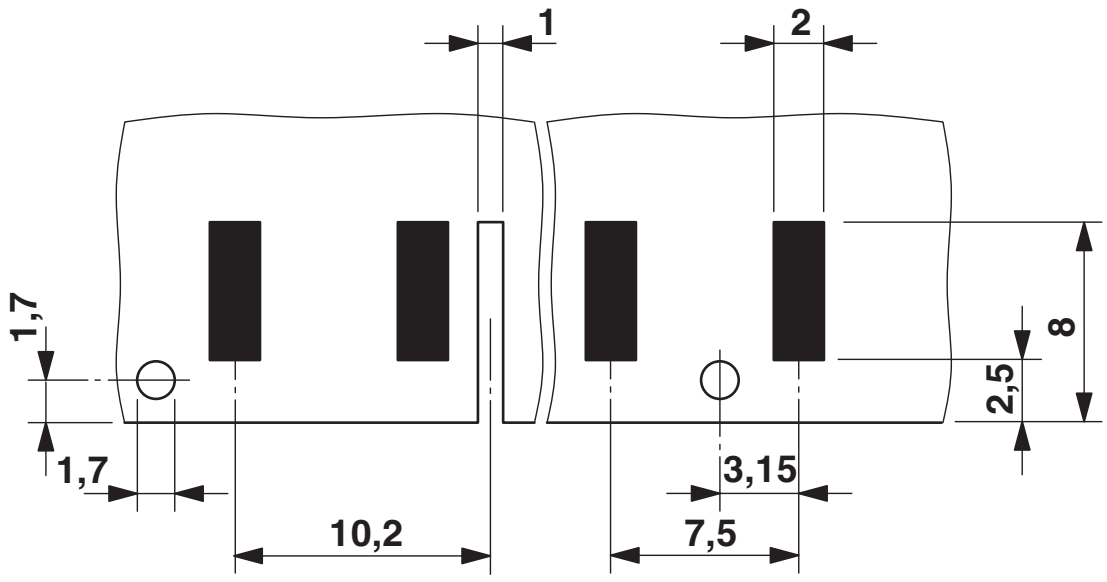

Size of the PCB: 1.6 ± 0.2 mm

Approvals

To download certificates, visit the product detail page: https://www.phoenixcontact.com/us/products/1883161

cULus Recognized
Approval ID: E60425-19941111

	Nominal voltage U_N	Nominal current I_N	Cross section AWG	Cross section mm^2
B				
	300 V	10 A	26 - 14	-
D				
	300 V	10 A	26 - 14	-

VDE report with production monitoring
Approval ID: 40020343

	Nominal voltage U_N	Nominal current I_N	Cross section AWG	Cross section mm^2
keine				
	400 V	10 A	-	0.2 - 1.5

Classifications

ECLASS

ECLASS-13.0	27460202
ECLASS-15.0	27460202

ETIM

ETIM 10.0	EC002638

UNSPSC

UNSPSC 21.0	39121400

Environmental product compliance

EU RoHS

Fulfills EU RoHS substance requirements	Yes, No exemptions

China RoHS

Environment friendly use period (EFUP)	EFUP-E
	No hazardous substances above the limits

EU REACH SVHC

REACH candidate substance (CAS No.)	No substance above 0.1 wt%

Phoenix Contact 2026 © - all rights reserved
https://www.phoenixcontact.com

Phoenix Contact USA
586 Fulling Mill Road
Middletown, PA 17057, United States
(+717) 944-1300
info@phoenixcon.com