# VC-K-T3-Z-M25 - Sleeve housing

1852961

https://www.phoenixcontact.com/us/products/1852961

Please be informed that the data shown in this PDF document is generated from our online catalog. Please find the complete data in the user documentation. Our general terms of use for downloads are valid.



Sleeve housing, Range of articles: VARIOCON, design: VC3, color: gray, When using fiber optics, the bending radii of the cable manufacturers must be observed.

## Commercial data

| | |
|---|---|
| Item number | 1852961 |
| Packing unit | 5 pc |
| Minimum order quantity | 1 pc |
| Sales key | AB01 |
| Product key | ABLAAA |
| GTIN | 4017918970833 |
| Weight per piece (including packing) | 65.04 g |
| Weight per piece (excluding packing) | 61.53 g |
| Customs tariff number | 85389099 |
| Country of origin | PL |

## Technical data

### Notes

| | |
|---|---|
| General | When using fiber optics, the bending radii of the cable manufacturers must be observed. |

Safety note

| | |
|---|---|
| Safety note | WARNING: The connectors may not be plugged in or disconnected under load. Ignoring the warning or improper use may damage persons and/or property. |
| | • WARNING: Commission properly functioning products only. The products must be regularly inspected for damage. Decommission defective products immediately. Replace damaged products. Repairs are not possible. |
| | • WARNING: Only electrically qualified personnel may install and operate the product. They must observe the following safety notes. The qualified personnel must be familiar with the basics of electrical engineering. They must be able to recognize and prevent danger. The relevant symbol on the packaging indicates that only personnel familiar with electrical engineering are allowed to install and operate the product. |
| | • The products are suitable for applications in plant, controller, and electrical device engineering. |
| | • When operating the connectors in outdoor applications, they must be separately protected against environmental influences. |
| | • Assembled products may not be manipulated or improperly opened. |
| | • Only use mating connectors that are specified in the technical data of the standards listed (e.g. the ones listed in the product accessories online at phoenixcontact.com/products). |
| | • When using the product in direct connection with third-party manufacturers, the user is responsible. |
| | • For operating voltages > 50 V AC, conductive connector housings must be grounded |
| | • Ensure that the protective or functional ground has been properly connected. |
| | • VDE 0100/1.97 § 411.1.3.2 and DIN EN 60 204/11.98 § 14.1.3 are applicable when combining several circuits in a cable and/or connector |
| | • Observe the corresponding technical data. You will find information:<br>o On the product<br>o On the packing label<br>o In the supplied documentation<br>o Online at phoenixcontact.com/products under the product |
| | • Only use tools recommended by Phoenix Contact |
| | • The installation notes/Design In documents online on the download page at phoenixcontact.com/products must be observed for this product. |
| | • Use a protective cap to protect connectors that are not in use. The suitable accessories are available online in the accessory section of the product at phoenixcontact.com/products |
| | • Operate the connector only when it is fully plugged in. |

| | |
|---|---|
| | • Ensure that when laying the cable, the tensile load on the connectors does not exceed the upper limit specified in the standards. |
| | • Observe the minimum bending radius of the cable. Lay the cable without twisting it. |
| | • The connector warms up in normal operation. Depending on the ambient conditions, the surface of the connector can continue to warm up. In this case, the user is responsible for posting warnings (e.g. DIN EN ISO 13732-1:2008-12). |

## Product properties

| | |
|---|---|
| Product type | Sleeve housings |
| Product family | VARIOCON |
| Type | VC3 |
| No. of cable outlets | 1 |
| Type of the screw connection | M25 |
| Fixing screws | M4 |
| Shielded | no |
| Cable outlet | slanted |

## Connection data

| | |
|---|---|
| Tightening torque | 1.2 ... 1.8 Nm |

## Dimensions

| | |
|---|---|
| Dimensional drawing | 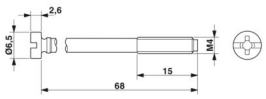 |
| Width | 33 mm |
| Height | 75 mm |
| Length | 96 mm |

## Material specifications

| | |
|---|---|
| Color | gray |
| Color of the housing part | gray |
| Material Housing | Polyamide (Sleeve housing) |
| Flammability rating according to UL 94 | V0 |
| Seal material | EPDM |
| | NBR (O-ring) |
| O-ring material | NBR |
| Material of locking screw | Stainless steel |

## Mechanical properties

Mechanical data

| | |
|---|---|
| Type of the screw connection | M25 |

| | |
|---|---|
| Locking type | Screw |

## Environmental and real-life conditions

### Ambient conditions

| | |
|---|---|
| Degree of protection | IP67 (DIN IEC 60529) |
| | IP65 |
| Ambient temperature (operation) | -40 °C ... 80 °C |

## Mounting

| | |
|---|---|
| Fixing screws | M4 |

## Drawings

Dimensional drawing

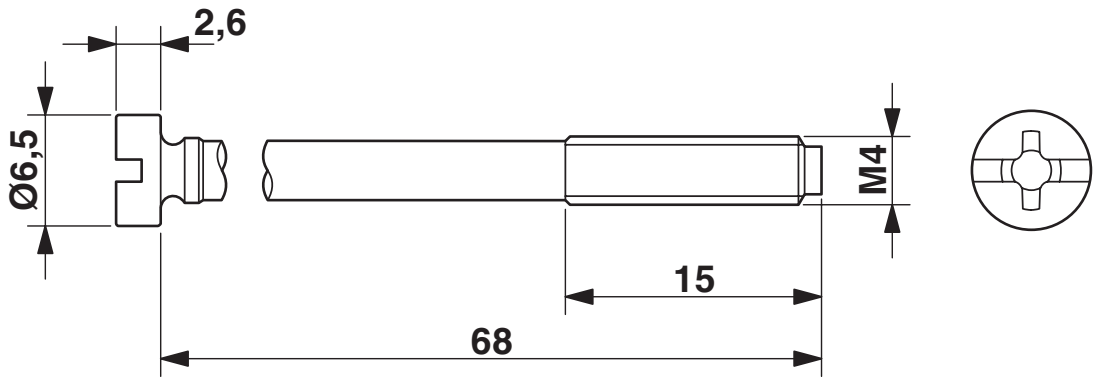


Dimensional drawing

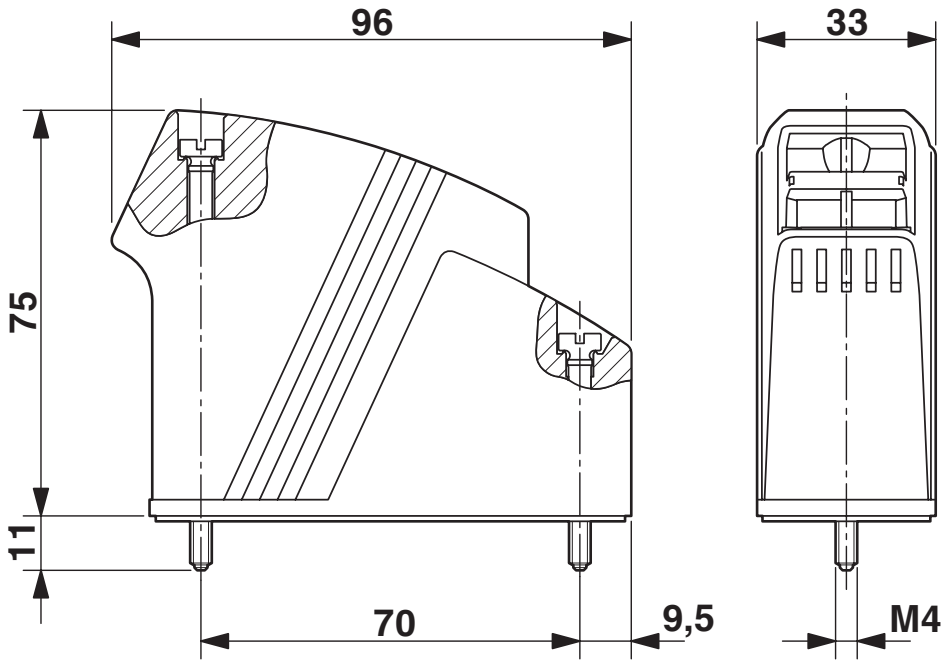

Dimensional drawing

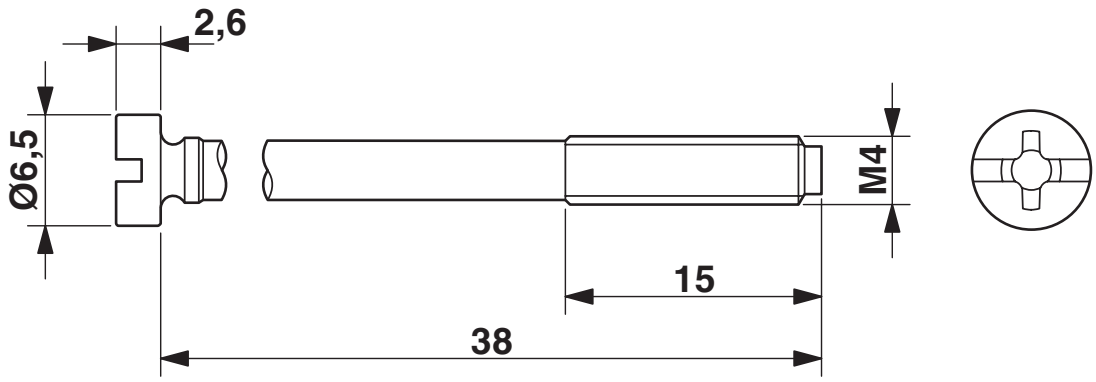

## Classifications

### ECLASS

| | |
|---|---|
| ECLASS-13.0 | 27440202 |

### ETIM

| | |
|---|---|
| ETIM 9.0 | EC000437 |

### UNSPSC

| | |
|---|---|
| UNSPSC 21.0 | 31261500 |

## Environmental product compliance

EU RoHS

| | |
|---|---|
| Fulfills EU RoHS substance requirements | Yes, No exemptions |

China RoHS

| | |
|---|---|
| Environment friendly use period (EFUP) | EFUP-E |
| | No hazardous substances above the limits |

EU REACH SVHC

| | |
|---|---|
| REACH candidate substance (CAS No.) | No substance above 0.1 wt% |

EF3.1 Climate Change

| | |
|---|---|
| CO2e kg | 7.415 kg CO2e |


Phoenix Contact 2026 © - all rights reserved
https://www.phoenixcontact.com



Phoenix Contact USA
586 Fulling Mill Road
Middletown, PA 17057, United States
(+717) 944-1300
info@phoenixcon.com