MCVK 1,5/10-G-3,81 - DIN rail connector

1832811

https://www.phoenixcontact.com/us/products/1832811

Please be informed that the data shown in this PDF document is generated from our online catalog. Please find the complete data in the user documentation. Our general terms of use for downloads are valid.





DIN rail connector, nominal cross section: 1.5 mm^2, color: green, nominal current: 8 A, rated voltage (III/2): 160 V, contact surface: Sn, contact connection type: Pin, number of potentials: 10, number of rows: 1, number of positions: 10, number of connections: 10, product range: MCVK 1,5/..-G, pitch: 3.81 mm, connection method: Screw connection with tension sleeve, screw head form: L Slotted, mounting: DIN rail mounting, conductor/PCB connection direction: 0 °, plug-in system: COMBICON MC 1,5, locking: without, mounting method: without, type of packaging: packed in cardboard

Your advantages

- Maximum flexibility when it comes to device design – one header for connectors with different connection technologies
- Direct plug-in block for DIN rail mounting
- For mounting on a DIN rail NS 15
- Well-known connection principle allows worldwide use

Commercial data

Item number	1832811
Packing unit	50 pc
Minimum order quantity	50 pc
Sales key	AA02
Product key	AABMAA
GTIN	4017918051563
Weight per piece (including packing)	13.92 g
Weight per piece (excluding packing)	13.461 g
Customs tariff number	85366990
Country of origin	PL

Technical data

Product properties

Product type	DIN rail connector
Product family	MCVK 1,5/..-G
Product line	COMBICON Connectors S
Type	DIN rail mounting
Number of positions	10
Pitch	3.81 mm
Number of connections	10
Number of rows	1
Number of potentials	10
Mounting type	without

Fitting of components

Partial assembly	No

Electrical properties

Properties

Nominal current I_N	8 A
Nominal voltage U_N	160 V
Contact resistance	3.3 mΩ
Rated voltage (III/3)	160 V
Rated surge voltage (III/3)	2.5 kV
Rated voltage (III/2)	160 V
Rated surge voltage (III/2)	2.5 kV
Rated voltage (II/2)	320 V
Rated surge voltage (II/2)	2.5 kV

Connection data

Connection technology

Type	DIN rail mounting
Connector system	COMBICON MC 1,5
Nominal cross section	1.5 mm²
Contact connection type	Pin

Interlock

Locking type	without
Mounting type	without

Conductor connection

Connection method	Screw connection with tension sleeve
Connection direction of the conductor to plug-in direction	0 °
Conductor cross-section rigid	0.14 mm² ... 1.5 mm²

Conductor cross-section flexible	0.14 mm² ... 1.5 mm²
Conductor cross-section AWG	28 ... 16
Conductor cross-section, flexible, with ferrule, without plastic sleeve	0.25 mm² ... 1.5 mm²
Conductor cross-section, flexible, with ferrule, with plastic sleeve	0.25 mm² ... 0.5 mm²
2 conductors with same cross section, rigid	0.14 mm² ... 0.5 mm²
2 conductors with same cross section, flexible	0.14 mm² ... 0.75 mm²
2 conductors with same cross section, flexible, with ferrule without plastic sleeve	0.25 mm² ... 0.34 mm²
2 conductors with the same cross section, flexible, with TWIN ferrule with plastic sleeve	0.5 mm² ... 0.5 mm²
Cylindrical gauge a x b / diameter	2.4 mm x 1.5 mm / 1.6 mm
Stripping length	7 mm
Drive form screw head	Slotted (L)
Tightening torque	0.22 Nm ... 0.25 Nm

Mounting

Mounting type	DIN rail mounting

Material specifications

Material data - contact

Note	WEEE/RoHS-compliant, free of whiskers according to IEC 60068-2-82/JEDEC JESD 201
Contact material	Cu alloy
Surface characteristics	Tin-plated
Metal surface terminal point (top layer)	Tin (5 µm - 7 µm Sn)
Metal surface terminal point (middle layer)	Nickel (2 µm - 3 µm Ni)
Metal surface contact area (top layer)	Tin (5 µm - 7 µm Sn)
Metal surface contact area (middle layer)	Nickel (2 µm - 3 µm Ni)

Material data - housing

Color (Housing)	green (6021)
Insulating material	PA
Insulating material group	I
CTI according to IEC 60112	600
Flammability rating according to UL 94	V0
Glow wire flammability index GWFI according to EN 60695-2-12	850
Glow wire ignition temperature GWIT according to EN 60695-2-13	775
Temperature for the ball pressure test according to EN 60695-10-2	125 °C

Notes

Notes on operation	In accordance with IEC 61984, COMBICON connectors have no switching power (COC). During designated use, they must not be plugged in or disconnected when carrying voltage or under load.

Dimensions

Dimensional drawing	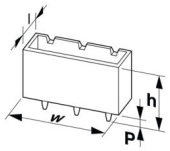
Pitch	3.81 mm
Width [w]	39.49 mm
Height [h]	24.2 mm
Length [l]	27.21 mm

Mechanical tests

Test for conductor damage and slackening

Specification	IEC 60999-1:1999-11
Result	Test passed

Pull-out test

Specification	IEC 60999-1:1999-11
Conductor cross-section/conductor type/tractive force setpoint/actual value	0.14 mm² / solid / > 10 N
	0.14 mm² / flexible / > 10 N
	1.5 mm² / solid / > 40 N
	1.5 mm² / flexible / > 40 N

Insertion and withdrawal forces

Result	Test passed
No. of cycles	25
Insertion strength per pos. approx.	8 N
Withdraw strength per pos. approx.	4 N

Torque test

Specification	IEC 60999-1:1999-11

Contact holder in insert

Specification	IEC 60512-15-1:2008-05
Contact holder in insert Requirements >20 N	Test passed

Resistance of inscriptions

Specification	IEC 60068-2-70:1995-12
Result	Test passed

Polarization and coding

Specification	IEC 60512-13-5:2006-02
Result	Test passed

Visual inspection

Specification	IEC 60512-1-1:2002-02
Result	Test passed

Dimension check

Specification	IEC 60512-1-2:2002-02
Result	Test passed

Electrical tests

Thermal test | Test group C

Specification	IEC 60512-5-1:2002-02
Tested number of positions	16

Insulation resistance

Specification	IEC 60512-3-1:2002-02
Insulation resistance, neighboring positions	> 5 MΩ

Air clearances and creepage distances |

Specification	IEC 60664-1:2007-04
Insulating material group	I
Comparative tracking index (IEC 60112)	CTI 600
Rated insulation voltage (III/3)	160 V
Rated surge voltage (III/3)	2.5 kV
minimum clearance value - non-homogenous field (III/3)	1.5 mm
minimum creepage distance (III/3)	2 mm
Note on connection cross section	With connected conductor 1.5 mm² (stranded).
Rated insulation voltage (III/2)	160 V
Rated surge voltage (III/2)	2.5 kV
minimum clearance value - non-homogenous field (III/2)	1.5 mm
minimum creepage distance (III/2)	1.5 mm
Rated insulation voltage (II/2)	320 V
Rated surge voltage (II/2)	2.5 kV
minimum clearance value - non-homogenous field (II/2)	1.5 mm
minimum creepage distance (II/2)	1.6 mm

Environmental and real-life conditions

Durability test

Specification	IEC 60512-9-1:2010-03
Impulse withstand voltage at sea level	2.95 kV
Contact resistance R_1	3.3 mΩ
Contact resistance R_2	3.3 mΩ
Insertion/withdrawal cycles	25
Insulation resistance, neighboring positions	> 5 MΩ

Climatic test

Specification	ISO 6988:1985-02
Corrosive stress	0.2 dm^3 SO_2 on 300 dm^3/40 °C/1 cycle
Thermal stress	105 °C/168 h
Power-frequency withstand voltage	1.39 kV

Vibration test

Specification	IEC 60068-2-6:2007-12
Frequency	10 - 150 - 10 Hz
Sweep speed	1 octave/min
Amplitude	0.35 mm (10 Hz ... 60.1 Hz)
Acceleration	5g (60.1 Hz ... 150 Hz)
Test duration per axis	2.5 h
Test directions	X-, Y- and Z-axis

Ambient conditions

Ambient temperature (storage/transport)	-40 °C ... 70 °C
Relative humidity (storage/transport)	30 % ... 70 %
Ambient temperature (assembly)	-5 °C ... 100 °C
Ambient temperature (operation)	-40 °C ... 105 °C (dependent on the derating curve)

Ambient conditions

Ambient temperature (operation)	-40 °C ... 105 °C (dependent on the derating curve)
Ambient temperature (storage/transport)	-40 °C ... 70 °C
Relative humidity (storage/transport)	30 % ... 70 %
Ambient temperature (assembly)	-5 °C ... 100 °C

Packaging specifications

Type of packaging	packed in cardboard

Drawings

Dimensional drawing

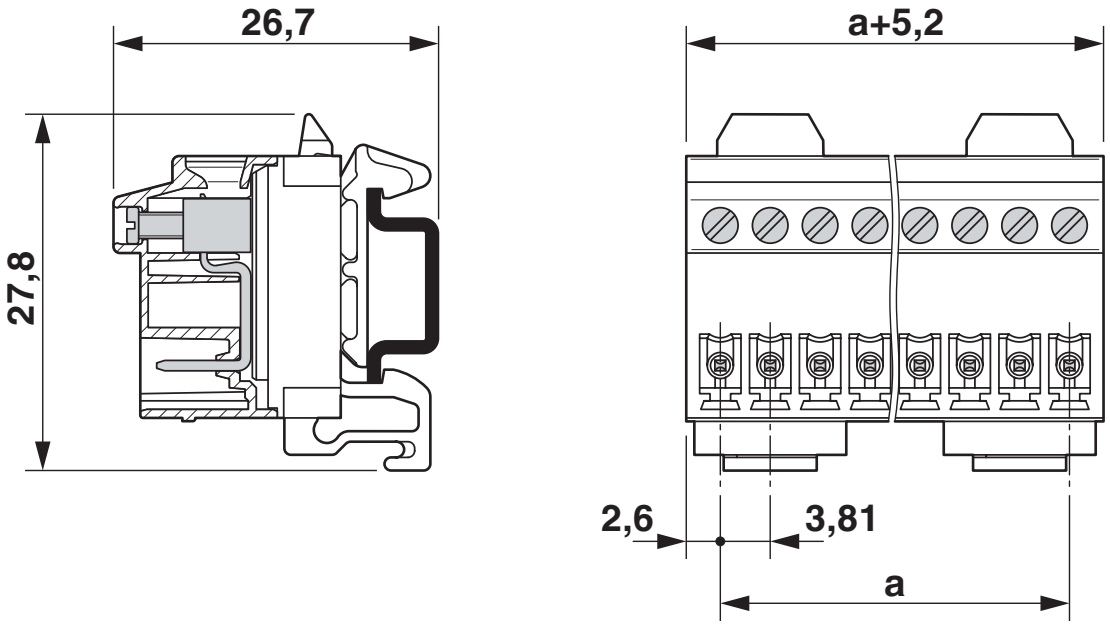

Diagram

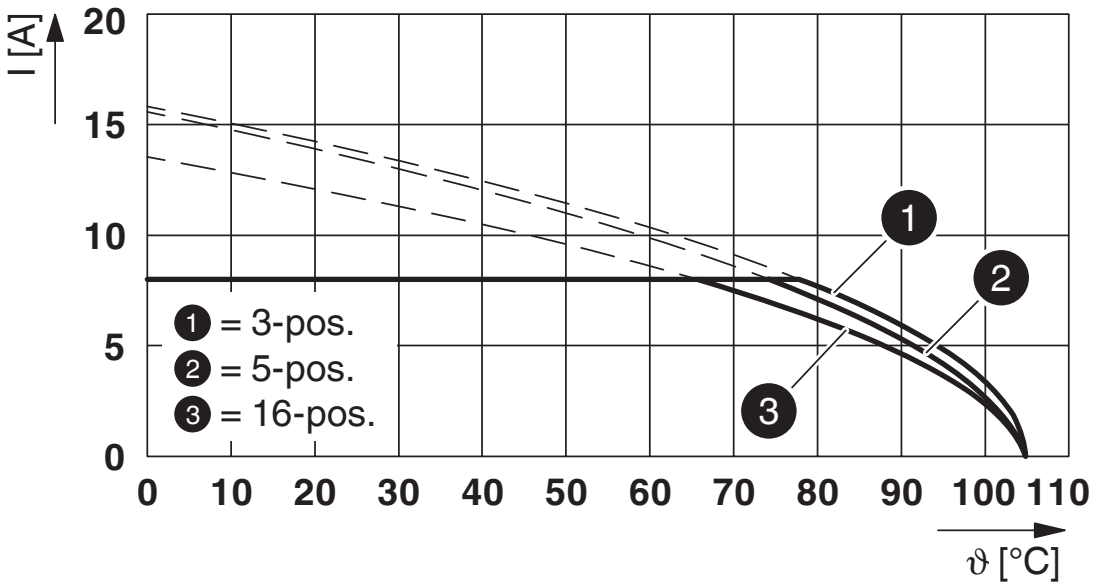

Type: MC 1,5/...-ST-3,81 with MCVK 1,5/...-G-3,81

Approvals

To download certificates, visit the product detail page: https://www.phoenixcontact.com/us/products/1832811

CSA
Approval ID: 13631

	Nominal voltage U_N	Nominal current I_N	Cross section AWG	Cross section mm^2
B				
	300 V	8 A	28 - 16	-

cULus Recognized
Approval ID: E60425-20110128

	Nominal voltage U_N	Nominal current I_N	Cross section AWG	Cross section mm^2
B				
	300 V	8 A	30 - 14	-

Classifications

ECLASS

ECLASS-13.0	27250117
ECLASS-15.0	27250117

ETIM

ETIM 10.0	EC000897

UNSPSC

UNSPSC 21.0	39121400

Environmental product compliance

EU RoHS

Fulfills EU RoHS substance requirements	Yes, No exemptions

China RoHS

Environment friendly use period (EFUP)	EFUP-E
	No hazardous substances above the limits

EU REACH SVHC

REACH candidate substance (CAS No.)	No substance above 0.1 wt%

EF3.1 Climate Change

CO2e kg	0.092 kg CO2e

Phoenix Contact 2026 © - all rights reserved
https://www.phoenixcontact.com

Phoenix Contact USA
586 Fulling Mill Road
Middletown, PA 17057, United States
(+717) 944-1300
info@phoenixcon.com