# IMC 1,5/ 6-G-3,5 RN P20 THR - PCB header

1830605

https://www.phoenixcontact.com/us/products/1830605

Please be informed that the data shown in this PDF document is generated from our online catalog. Please find the complete data in the user documentation. Our general terms of use for downloads are valid.






The figure shows a 10-position version of the product

PCB headers, nominal cross section: 1.5 mm$^2$, color: black, nominal current: 8 A, rated voltage (III/2): 160 V, contact surface: Sn, contact connection type: Socket, number of potentials: 6, number of rows: 1, number of positions: 6, number of connections: 6, product range: IMC 1,5/..-G-RN-THR, pitch: 3.5 mm, mounting: THR soldering / wave soldering, pin layout: Linear pinning, solder pin [P]: 2 mm, number of solder pins per potential: 2, plug-in system: COMBICON FMC 1,5 - MCDN 1,5, Pin connector pattern alignment: Standard, locking: Snap-in locking, mounting method: Engagement nose, type of packaging: packed in cardboard

## Your advantages

- Designed for integration into the SMT soldering process
- Intuitive locking mechanism prevents accidental disconnection
- Inverted header with socket contacts for touch-proof device outputs or PCB/PCB connections

## Commercial data

| | |
|---|---|
| Item number | 1830605 |
| Packing unit | 50 pc |
| Minimum order quantity | 50 pc |
| Note | Made to order (non-returnable) |
| Sales key | AA02 |
| Product key | AABTIA |
| GTIN | 4046356887564 |
| Weight per piece (including packing) | 3.16 g |
| Weight per piece (excluding packing) | 2.26 g |
| Customs tariff number | 85366930 |
| Country of origin | DE |

## Technical data

### Product properties

| | |
|---|---|
| Product type | PCB headers |
| Product family | IMC 1,5/..-G-RN-THR |
| Product line | COMBICON Connectors S |
| Type | Inverted |
| Number of positions | 6 |
| Pitch | 3.5 mm |
| Number of connections | 6 |
| Number of rows | 1 |
| Number of potentials | 6 |
| Mounting type | Engagement nose |
| Pin layout | Linear pinning |
| Solder pins per potential | 2 |

Fitting of components

| | |
|---|---|
| Partial assembly | No |

### Electrical properties

Properties

| | |
|---|---|
| Nominal current $I_N$ | 8 A |
| Nominal voltage $U_N$ | 160 V |
| Contact resistance | 2.1 mΩ |
| Rated voltage (III/3) | 160 V |
| Rated surge voltage (III/3) | 2.5 kV |
| Rated voltage (III/2) | 160 V |
| Rated surge voltage (III/2) | 2.5 kV |
| Rated voltage (II/2) | 320 V |
| Rated surge voltage (II/2) | 2.5 kV |

### Mounting

| | |
|---|---|
| Mounting type | THR soldering / wave soldering |
| Pin layout | Linear pinning |

Processing notes

| | |
|---|---|
| Process | Reflow/wave soldering |
| Moisture Sensitive Level | MSL 1 |
| Classification temperature $T_c$ | 260 °C |
| Solder cycles in the reflow | 3 |

### Material specifications

Material data - contact

| | |
|---|---|
| Note | WEEE/RoHS-compliant, free of whiskers according to IEC 60068-2-82/JEDEC JESD 201 |
| Contact material | Cu alloy |
| Surface characteristics | hot-dip tin-plated |
| Metal surface contact area (top layer) | Tin (2 µm - 4 µm Sn) |
| Metal surface soldering area (top layer) | Tin (2 µm - 4 µm Sn) |

Material data - housing

| | |
|---|---|
| Color (Housing) | black (9005) |
| Insulating material | LCP |
| Insulating material group | IIIa |
| CTI according to IEC 60112 | 175 |
| Flammability rating according to UL 94 | V0 |

## Dimensions

| | |
|---|---|
| Dimensional drawing | 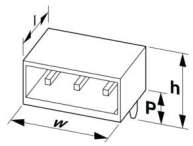  |
| Pitch | 3.5 mm |
| Width [w] | 21.8 mm |
| Height [h] | 8.3 mm |
| Length [l] | 14.5 mm |
| Installed height | 6.3 mm |
| Solder pin length [P] | 2 mm |
| Pin dimensions | 1.12 mm |

PCB design

| | |
|---|---|
| Pin spacing | 2.54 mm |
| Hole diameter | 1.2 mm |

## Mechanical tests

Visual inspection

| | |
|---|---|
| Specification | IEC 60512-1-1:2002-02 |
| Result | Test passed |

Dimension check

| | |
|---|---|
| Specification | IEC 60512-1-2:2002-02 |
| Result | Test passed |

Resistance of inscriptions

| | |
|---|---|
| Specification | IEC 60068-2-70:1995-12 |
| Result | Test passed |

Polarization and coding

| | |
|---|---|
| Specification | IEC 60512-13-5:2006-02 |
| Result | Test passed |

Contact holder in insert

| | |
|---|---|
| Specification | IEC 60512-15-1:2008-05 |
| Contact holder in insert<br>Requirements >20 N | Test passed |

Insertion and withdrawal forces

| | |
|---|---|
| Specification | IEC 60512-13-2:2006-02 |
| Result | Test passed |
| No. of cycles | 25 |
| Insertion strength per pos. approx. | 3 N |
| Withdraw strength per pos. approx. | 3 N |

## Electrical tests

Thermal test | Test group C

| | |
|---|---|
| Specification | IEC 60512-5-1:2002-02 |
| Tested number of positions | 12 |

Insulation resistance

| | |
|---|---|
| Specification | IEC 60512-3-1:2002-02 |
| Insulation resistance, neighboring positions | > 5 MΩ |

Air clearances and creepage distances |

| | |
|---|---|
| Specification | IEC 60664-1:2007-04 |
| Insulating material group | IIIa |
| Comparative tracking index (IEC 60112) | CTI 175 |
| Rated insulation voltage (III/3) | 160 V |
| Rated surge voltage (III/3) | 2.5 kV |
| minimum clearance value - non-homogenous field (III/3) | 1.5 mm |
| minimum creepage distance (III/3) | 2.5 mm |
| Rated insulation voltage (III/2) | 160 V |
| Rated surge voltage (III/2) | 2.5 kV |
| minimum clearance value - non-homogenous field (III/2) | 1.5 mm |
| minimum creepage distance (III/2) | 1.6 mm |
| Rated insulation voltage (II/2) | 320 V |
| Rated surge voltage (II/2) | 2.5 kV |
| minimum clearance value - non-homogenous field (II/2) | 1.5 mm |
| minimum creepage distance (II/2) | 3.2 mm |

## Environmental and real-life conditions

Durability test

| | |
|---|---|
| Specification | IEC 60512-9-1:2010-03 |
| Impulse withstand voltage at sea level | 2.95 kV |

| | |
|---|---|
| Contact resistance $R_1$ | 2.1 mΩ |
| Contact resistance $R_2$ | 2.3 mΩ |
| Insertion/withdrawal cycles | 25 |
| Insulation resistance, neighboring positions | > 5 MΩ |

Climatic test

| | |
|---|---|
| Specification | ISO 6988:1985-02 |
| Corrosive stress | 0.2 $dm^3$ $SO_2$ on 300 $dm^3$/40 °C/1 cycle |
| Thermal stress | 100 °C/168 h |
| Power-frequency withstand voltage | 1.39 kV |

Vibration test

| | |
|---|---|
| Specification | IEC 60068-2-6:2007-12 |
| Frequency | 10 - 150 - 10 Hz |
| Sweep speed | 1 octave/min |
| Amplitude | 0.35 mm (10 Hz ... 60.1 Hz) |
| Acceleration | 5g (60.1 Hz ... 150 Hz) |
| Test duration per axis | 2.5 h |
| Test directions | X-, Y- and Z-axis |

Ambient conditions

| | |
|---|---|
| Ambient temperature (storage/transport) | -40 °C ... 70 °C |
| Relative humidity (storage/transport) | 30 % ... 70 % |
| Ambient temperature (assembly) | -5 °C ... 100 °C |
| Ambient temperature (operation) | -40 °C ... 100 °C (dependent on the derating curve) |

## Packaging specifications

| | |
|---|---|
| Type of packaging | packed in cardboard |
| Outer packaging type | Carton |

## Drawings

Dimensional drawing

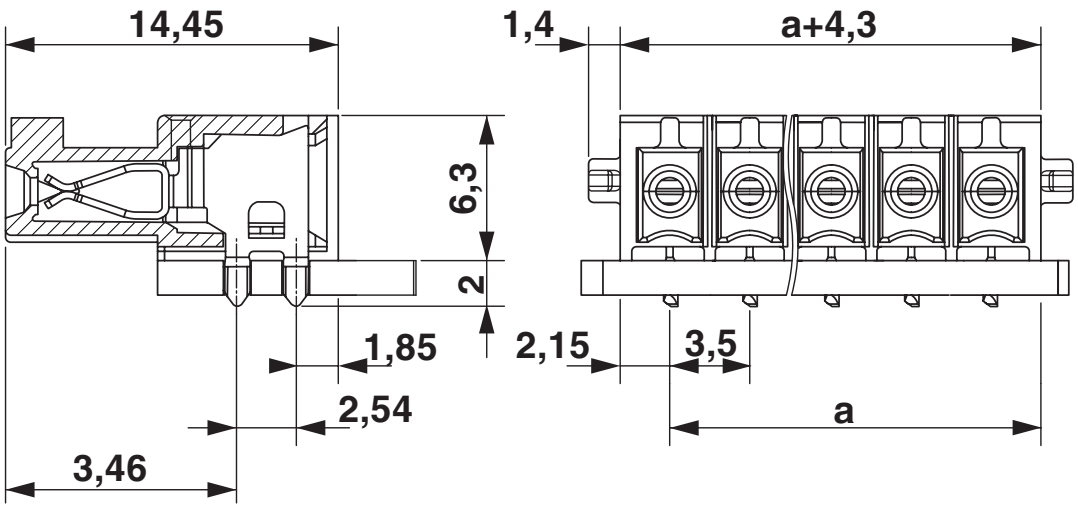


Diagram

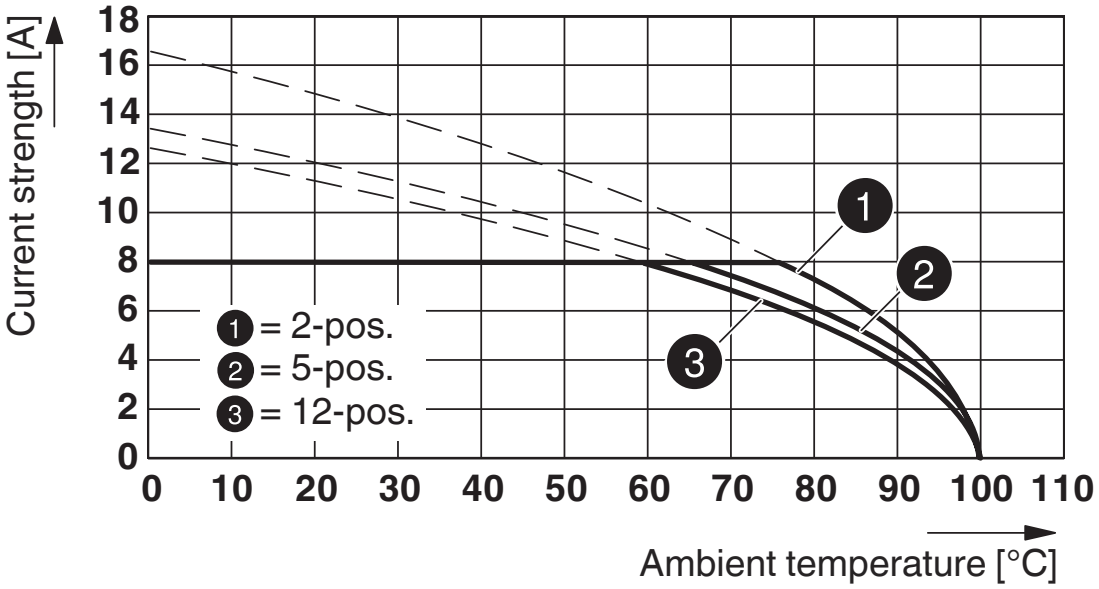


Type: IFMC 1,5/...-ST-3,5-RF with IMC 1,5/...-G-3,5 RN P20 THR

Drilling plan/solder pad geometry

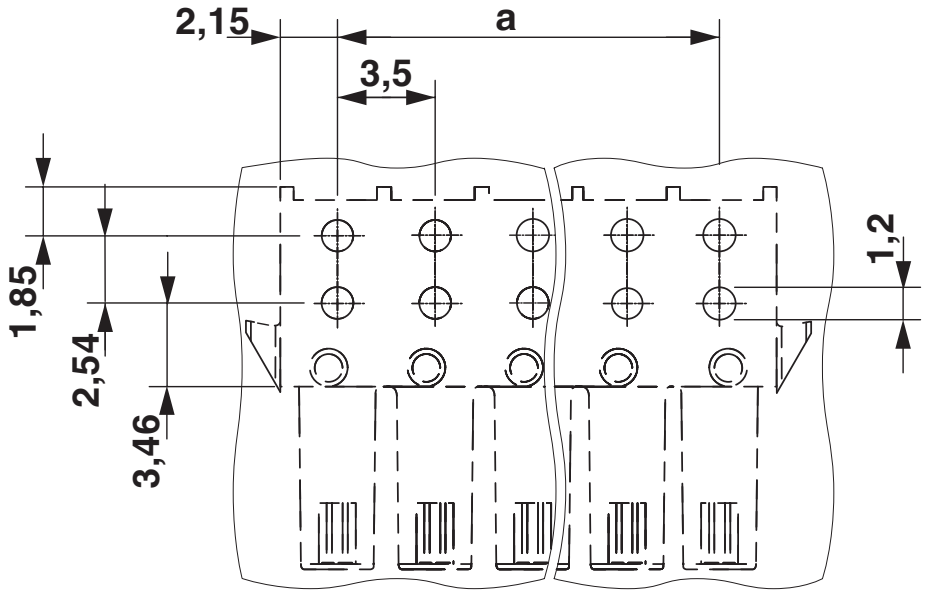

## Approvals

To download certificates, visit the product detail page: https://www.phoenixcontact.com/us/products/1830605

**cULus Recognized**
Approval ID: E60425-20110128

| | Nominal voltage $U_N$ | Nominal current $I_N$ | Cross section AWG | Cross section $mm^2$ |
|---|---|---|---|---|
| B | | | | |
| | 300 V | 8 A | - | - |
| D | | | | |
| | 300 V | 8 A | - | - |

**VDE Zeichengenehmigung**
Approval ID: 40011723

| | Nominal voltage $U_N$ | Nominal current $I_N$ | Cross section AWG | Cross section $mm^2$ |
|---|---|---|---|---|
| keine | | | | |
| | 160 V | 8 A | - | - |

## Classifications

### ECLASS

| | |
|---|---|
| ECLASS-13.0 | 27460201 |
| ECLASS-15.0 | 27460201 |

### ETIM

| | |
|---|---|
| ETIM 10.0 | EC002637 |

### UNSPSC

| | |
|---|---|
| UNSPSC 21.0 | 39121400 |

## Environmental product compliance

EU RoHS

| | |
|---|---|
| Fulfills EU RoHS substance requirements | Yes, No exemptions |

China RoHS

| | |
|---|---|
| Environment friendly use period (EFUP) | EFUP-E |
| | No hazardous substances above the limits |

EU REACH SVHC

| | |
|---|---|
| REACH candidate substance (CAS No.) | No substance above 0.1 wt% |

EF3.1 Climate Change

| | |
|---|---|
| CO2e kg | 0.025 kg CO2e |


Phoenix Contact 2026 © - all rights reserved
https://www.phoenixcontact.com



Phoenix Contact USA
586 Fulling Mill Road
Middletown, PA 17057, United States
(+717) 944-1300
info@phoenixcon.com