# SPT-THR 1,5/ 8-H-5,08 P26 - PCB terminal block

1823146

https://www.phoenixcontact.com/us/products/1823146

Please be informed that the data shown in this PDF document is generated from our online catalog. Please find the complete data in the user documentation. Our general terms of use for downloads are valid.






PCB terminal block, nominal current: 17.5 A, rated voltage (III/2): 320 V, nominal cross section: 1.5 mm$^2$, number of potentials: 8, number of rows: 1, number of positions per row: 8, product range: SPT 1,5/..-H-THR, pitch: 5.08 mm, connection method: Push-in spring connection, mounting: THR soldering / wave soldering, conductor/PCB connection direction: 0 °, color: black, Pin layout: Linear pinning, Solder pin [P]: 2.6 mm, number of solder pins per potential: 2, type of packaging: packed in cardboard

## Your advantages

- Time saving push-in connection, tools not required
- Defined contact force ensures that contact remains stable over the long term
- Intuitive operation due to color-coded actuating push button
- Designed for integration into the SMT soldering process
- Quick and convenient testing using integrated test option
- Operation and conductor connection from one direction enable integration into front of device

## Commercial data

| | |
|---|---|
| Item number | 1823146 |
| Packing unit | 60 pc |
| Minimum order quantity | 60 pc |
| Sales key | AA12 |
| Product key | AALCCB |
| GTIN | 4046356811880 |
| Weight per piece (including packing) | 6 g |
| Weight per piece (excluding packing) | 6 g |
| Customs tariff number | 85369010 |
| Country of origin | CN |

# Technical data

## Product properties

| | |
|---|---|
| Product type | PCB terminal block |
| Product family | SPT 1,5/..-H-THR |
| Product line | COMBICON Terminals S |
| Number of positions | 8 |
| Pitch | 5.08 mm |
| Number of connections | 8 |
| Number of rows | 1 |
| Number of potentials | 8 |
| Pin layout | Linear pinning |
| Solder pins per potential | 2 |

### Fitting of components

| | |
|---|---|
| Partial assembly | No |

## Electrical properties

### Properties

| | |
|---|---|
| Nominal current $I_N$ | 17.5 A |
| Nominal voltage $U_N$ | 320 V |
| Rated voltage (III/3) | 250 V |
| Rated surge voltage (III/3) | 4 kV |
| Rated voltage (III/2) | 320 V |
| Rated surge voltage (III/2) | 4 kV |
| Rated voltage (II/2) | 500 V |
| Rated surge voltage (II/2) | 4 kV |

## Connection data

### Connection technology

| | |
|---|---|
| Nominal cross section | 1.5 mm² |

### Conductor connection

| | |
|---|---|
| Connection method | Push-in spring connection |
| Conductor cross-section rigid | 0.2 mm² ... 1.5 mm² |
| Conductor cross-section flexible | 0.2 mm² ... 1.5 mm² |
| Conductor cross-section AWG | 24 ... 16 |
| Conductor cross-section, flexible, with ferrule, without plastic sleeve | 0.2 mm² ... 1.5 mm² |
| Conductor cross-section, flexible, with ferrule, with plastic sleeve | 0.2 mm² ... 0.75 mm² |
| Stripping length | 8 mm |

## Mounting

| | |
|---|---|
| Mounting type | THR soldering / wave soldering |

| | |
|---|---|
| Pin layout | Linear pinning |

Processing notes

| | |
|---|---|
| Process | Reflow/wave soldering |
| Moisture Sensitive Level | MSL 1 |
| Classification temperature $T_c$ | 260 °C |
| Solder cycles in the reflow | 3 |

## Material specifications

Material data - contact

| | |
|---|---|
| Note | WEEE/RoHS-compliant, free of whiskers according to IEC 60068-2-82/JEDEC JESD 201 |
| Contact material | Cu alloy |
| Surface characteristics | hot-dip tin-plated |
| Metal surface terminal point (top layer) | Tin (4 µm - 8 µm Sn) |
| Metal surface soldering area (top layer) | Tin (4 µm - 8 µm Sn) |

Material data - housing

| | |
|---|---|
| Color (Housing) | black (9005) |
| Insulating material | LCP |
| Insulating material group | IIIa |
| CTI according to IEC 60112 | 175 |
| Flammability rating according to UL 94 | V0 |

Material data – actuating element

| | |
|---|---|
| Color (Actuating element) | white (9010) |
| Insulating material | PA GF |
| Insulating material group | I |
| CTI according to IEC 60112 | 600 |
| Flammability rating according to UL 94 | V0 |

## Notes

| | |
|---|---|
| Assembly note | This item is not suitable for PCB cleaning with liquids. |

## Dimensions

| | |
|---|---|
| Dimensional drawing | 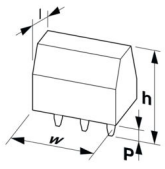 |
| Pitch | 5.08 mm |
| Width [w] | 39.56 mm |
| Height [h] | 10.3 mm |
| Length [l] | 13.6 mm |
| Installed height | 7.7 mm |

| | |
|---|---|
| Solder pin length [P] | 2.6 mm |
| Pin dimensions | 0.7 x 0.3 mm |

PCB design

| | |
|---|---|
| Pin spacing | 7 mm |
| Hole diameter | 1.1 mm |

## Mechanical tests

Test for conductor damage and slackening

| | |
|---|---|
| Specification | IEC 60999-1:1999-11 |
| Result | Test passed |

Pull-out test

| | |
|---|---|
| Specification | IEC 60999-1:1999-11 |
| Conductor cross-section/conductor type/tractive force setpoint/actual value | 0.2 mm² / solid / > 10 N |
| | 0.2 mm² / flexible / > 10 N |
| | 1.5 mm² / solid / > 40 N |
| | 1.5 mm² / flexible / > 40 N |

## Electrical tests

Temperature-rise test

| | |
|---|---|
| Specification | IEC 60947-7-4:2019-01 |
| Requirement temperature-rise test | The sum of ambient temperature and temperature rise of the PCB terminal block shall not exceed the upper limiting temperature. |

Short-time withstand current

| | |
|---|---|
| Specification | IEC 60947-7-4:2019-01 |

Insulation resistance

| | |
|---|---|
| Specification | IEC 60512-3-1:2002-02 |
| Insulation resistance, neighboring positions | > 5 MΩ |

Air clearances and creepage distances |

| | |
|---|---|
| Specification | IEC 60947-7-4:2013-08 |
| Insulating material group | IIIa |
| Comparative tracking index (IEC 60112) | CTI 175 |
| Rated insulation voltage (III/3) | 250 V |
| Rated surge voltage (III/3) | 4 kV |
| minimum clearance value - non-homogenous field (III/3) | 3 mm |
| minimum creepage distance (III/3) | 4 mm |
| Rated insulation voltage (III/2) | 320 V |
| Rated surge voltage (III/2) | 4 kV |
| minimum clearance value - non-homogenous field (III/2) | 3 mm |
| minimum creepage distance (III/2) | 3.2 mm |
| Rated insulation voltage (II/2) | 500 V |

| | |
|---|---|
| Rated surge voltage (II/2) | 4 kV |
| minimum clearance value - non-homogenous field (II/2) | 3 mm |
| minimum creepage distance (II/2) | 5 mm |

## Environmental and real-life conditions

Vibration test

| | |
|---|---|
| Specification | IEC 60068-2-6:2007-12 |
| Frequency | 10 - 150 - 10 Hz |
| Sweep speed | 1 octave/min |
| Amplitude | 0.35 mm (10 Hz ... 60.1 Hz) |
| Acceleration | 5g (60.1 Hz ... 150 Hz) |
| Test duration per axis | 2.5 h |
| Test directions | X-, Y- and Z-axis |

Glow-wire test

| | |
|---|---|
| Specification | IEC 60695-2-10:2021-10 |
| Temperature | 850 °C |
| Time of exposure | 5 s |

Aging

| | |
|---|---|
| Specification | IEC 60947-7-4:2019-01 |

Ambient conditions

| | |
|---|---|
| Ambient temperature (storage/transport) | -40 °C ... 70 °C |
| Relative humidity (storage/transport) | 30 % ... 70 % |
| Ambient temperature (assembly) | -5 °C ... 100 °C |
| Ambient temperature (operation) | -40 °C ... 105 °C (Depending on the current carrying capacity/derating curve) |

## Packaging specifications

| | |
|---|---|
| Type of packaging | packed in cardboard |

## Drawings

Dimensional drawing

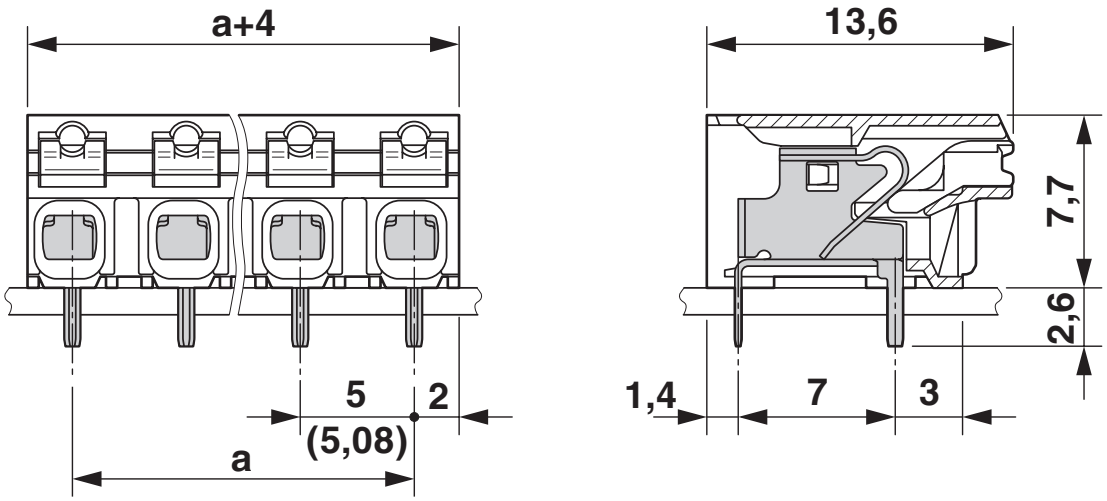


Diagram

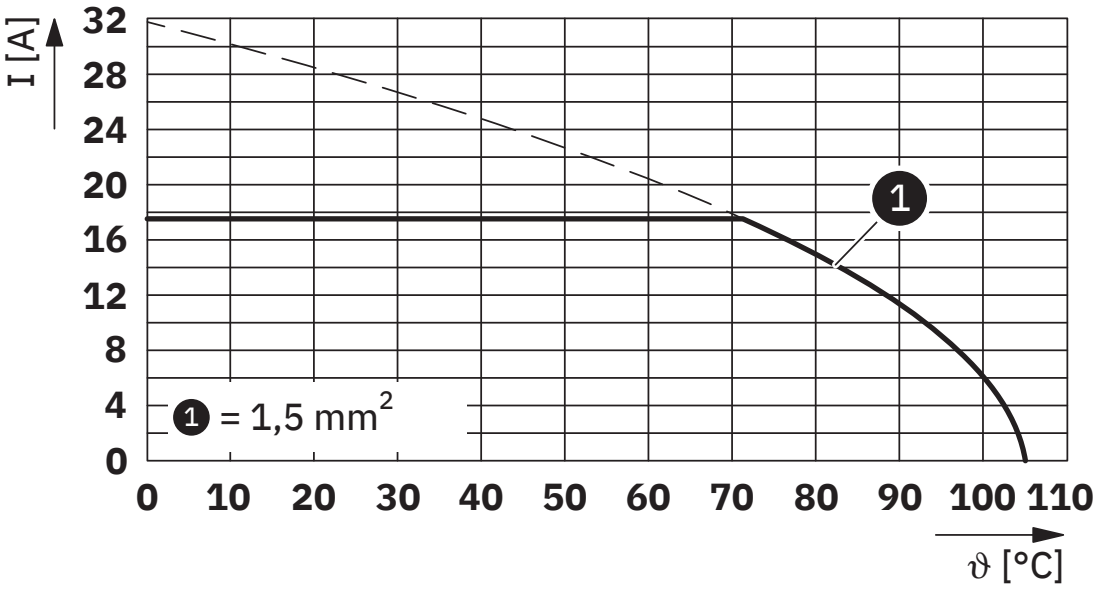


Type: SPT-THR 1,5/...-H-5,08 P...

Drilling plan/solder pad geometry

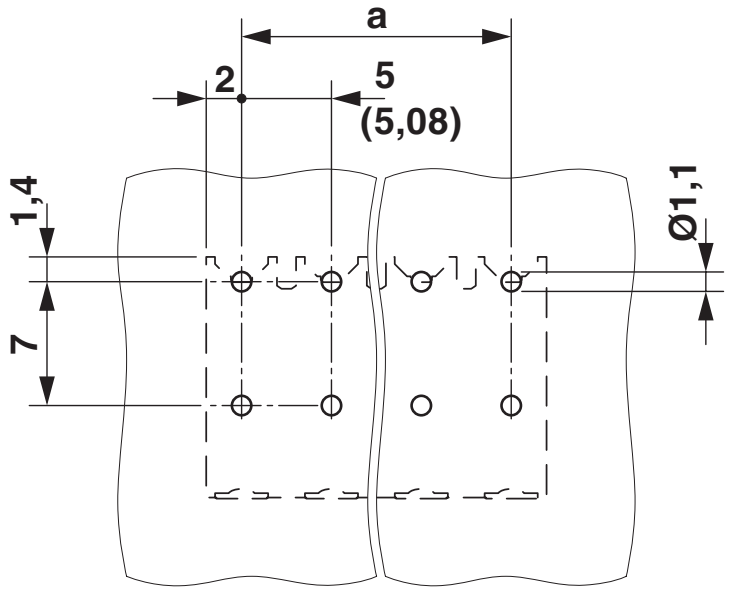

## Approvals

To download certificates, visit the product detail page: https://www.phoenixcontact.com/us/products/1823146

**cULus Recognized**
Approval ID: E60425-20061129

| | Nominal voltage $U_N$ | Nominal current $I_N$ | Cross section AWG | Cross section $mm^2$ |
|---|---|---|---|---|
| B | | | | |
| | 300 V | 10 A | 24 - 16 | - |
| D | | | | |
| | 300 V | 10 A | 24 - 16 | - |

**VDE approval of drawings**
Approval ID: 40046113

| | Nominal voltage $U_N$ | Nominal current $I_N$ | Cross section AWG | Cross section $mm^2$ |
|---|---|---|---|---|
| keine | | | | |
| | 320 V | 17.5 A | - | 0.2 - 1.5 |

## Classifications

### ECLASS

| | |
|---|---|
| ECLASS-13.0 | 27460101 |
| ECLASS-15.0 | 27460101 |

### ETIM

| | |
|---|---|
| ETIM 10.0 | EC002643 |

### UNSPSC

| | |
|---|---|
| UNSPSC 21.0 | 39121400 |

## Environmental product compliance

EU RoHS

| | |
|---|---|
| Fulfills EU RoHS substance requirements | Yes, No exemptions |

China RoHS

| | |
|---|---|
| Environment friendly use period (EFUP) | EFUP-E |
| | No hazardous substances above the limits |

EU REACH SVHC

| | |
|---|---|
| REACH candidate substance (CAS No.) | No substance above 0.1 wt% |

EF3.1 Climate Change

| | |
|---|---|
| CO2e kg | 0.056 kg CO2e |


Phoenix Contact 2026 © - all rights reserved
https://www.phoenixcontact.com



Phoenix Contact USA
586 Fulling Mill Road
Middletown, PA 17057, United States
(+717) 944-1300
info@phoenixcon.com