SPT-THR 1,5/ 3-V-3,5 P26 - PCB terminal block

1822325

https://www.phoenixcontact.com/us/products/1822325

Please be informed that the data shown in this PDF document is generated from our online catalog. Please find the complete data in the user documentation. Our general terms of use for downloads are valid.





PCB terminal block, nominal current: 17.5 A, rated voltage (III/2): 160 V, nominal cross section: 1.5 mm^2, number of potentials: 3, number of rows: 1, number of positions per row: 3, product range: SPT 1,5/..-V-THR, pitch: 3.5 mm, connection method: Push-in spring connection, mounting: THR soldering / wave soldering, conductor/PCB connection direction: 90 °, color: black, Pin layout: Linear pinning, Solder pin [P]: 2.6 mm, number of solder pins per potential: 2, type of packaging: packed in cardboard

Your advantages

- Time saving push-in connection, tools not required
- Defined contact force ensures that contact remains stable over the long term
- Intuitive operation due to color-coded actuating push button
- Designed for integration into the SMT soldering process
- Operation and conductor connection from one direction enable integration into front of device
- Quick and convenient testing using integrated test option
- Two solder pins reduce the mechanical strain on the soldering spots

Commercial data

Item number	1822325
Packing unit	350 pc
Minimum order quantity	350 pc
Sales key	AA12
Product key	AALCCG
GTIN	4046356811941
Weight per piece (including packing)	1.617 g
Weight per piece (excluding packing)	1.5 g
Customs tariff number	85369010
Country of origin	CN

Technical data

Product properties

Product type	PCB terminal block
Product family	SPT 1,5/..-V-THR
Product line	COMBICON Terminals S
Number of positions	3
Pitch	3.5 mm
Number of connections	3
Number of rows	1
Number of potentials	3
Pin layout	Linear pinning
Solder pins per potential	2

Fitting of components

Partial assembly	No

Electrical properties

Properties

Nominal current I_N	17.5 A
Nominal voltage U_N	160 V
Rated voltage (III/3)	160 V
Rated surge voltage (III/3)	2.5 kV
Rated voltage (III/2)	160 V
Rated surge voltage (III/2)	2.5 kV
Rated voltage (II/2)	320 V
Rated surge voltage (II/2)	2.5 kV

Connection data

Connection technology

Nominal cross section	1.5 mm²

Conductor connection

Connection method	Push-in spring connection
Conductor cross-section rigid	0.2 mm² ... 1.5 mm²
Conductor cross-section flexible	0.2 mm² ... 1.5 mm²
Conductor cross-section AWG	24 ... 16
Conductor cross-section, flexible, with ferrule, without plastic sleeve	0.2 mm² ... 1.5 mm²
Conductor cross-section, flexible, with ferrule, with plastic sleeve	0.2 mm² ... 0.75 mm²
Stripping length	8 mm

Mounting

Mounting type	THR soldering / wave soldering

Pin layout	Linear pinning

Processing notes

Process	Reflow/wave soldering
Moisture Sensitive Level	MSL 1
Classification temperature T_c	260 °C
Solder cycles in the reflow	3

Material specifications

Material data - contact

Note	WEEE/RoHS-compliant, free of whiskers according to IEC 60068-2-82/JEDEC JESD 201
Contact material	Cu alloy
Surface characteristics	hot-dip tin-plated
Metal surface terminal point (top layer)	Tin (4 µm - 8 µm Sn)
Metal surface soldering area (top layer)	Tin (4 µm - 8 µm Sn)

Material data - housing

Color (Housing)	black (9005)
Insulating material	LCP
Insulating material group	IIIa
CTI according to IEC 60112	175
Flammability rating according to UL 94	V0

Material data – actuating element

Color (Actuating element)	white (9010)
Insulating material	PA GF
Insulating material group	I
CTI according to IEC 60112	600
Flammability rating according to UL 94	V0

Notes

Assembly note	This item is not suitable for PCB cleaning with liquids.

Dimensions

Dimensional drawing	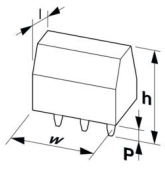
Pitch	3.5 mm
Width [w]	11 mm
Height [h]	16.2 mm
Length [l]	7.7 mm
Installed height	13.6 mm

Solder pin length [P]	2.6 mm
Pin dimensions	0.7 x 0.3 mm

PCB design

Pin spacing	5.5 mm
Hole diameter	1.1 mm

Mechanical tests

Test for conductor damage and slackening

Specification	IEC 60999-1:1999-11
Result	Test passed

Pull-out test

Specification	IEC 60999-1:1999-11
Conductor cross-section/conductor type/tractive force setpoint/actual value	0.2 mm² / solid / > 10 N
	0.2 mm² / flexible / > 10 N
	1.5 mm² / solid / > 40 N
	1.5 mm² / flexible / > 40 N

Electrical tests

Temperature-rise test

Specification	IEC 60947-7-4:2019-01
Requirement temperature-rise test	The sum of ambient temperature and temperature rise of the PCB terminal block shall not exceed the upper limiting temperature.

Short-time withstand current

Specification	IEC 60947-7-4:2019-01

Insulation resistance

Specification	IEC 60512-3-1:2002-02
Insulation resistance, neighboring positions	> 5 MΩ

Air clearances and creepage distances |

Specification	IEC 60947-7-4:2019-01
Insulating material group	IIIa
Comparative tracking index (IEC 60112)	CTI 175
Rated insulation voltage (III/3)	160 V
Rated surge voltage (III/3)	2.5 kV
minimum clearance value - non-homogenous field (III/3)	1.5 mm
minimum creepage distance (III/3)	2.5 mm
Rated insulation voltage (III/2)	160 V
Rated surge voltage (III/2)	2.5 kV
minimum clearance value - non-homogenous field (III/2)	1.5 mm
minimum creepage distance (III/2)	1.6 mm
Rated insulation voltage (II/2)	320 V

Rated surge voltage (II/2)	2.5 kV
minimum clearance value - non-homogenous field (II/2)	1.5 mm
minimum creepage distance (II/2)	3.2 mm

Environmental and real-life conditions

Vibration test

Specification	IEC 60068-2-6:2007-12
Frequency	10 - 150 - 10 Hz
Sweep speed	1 octave/min
Amplitude	0.35 mm (10 Hz ... 60.1 Hz)
Acceleration	5g (60.1 Hz ... 150 Hz)
Test duration per axis	2.5 h
Test directions	X-, Y- and Z-axis

Glow-wire test

Specification	IEC 60695-2-10:2013-04
Temperature	850 °C
Time of exposure	5 s

Aging

Specification	IEC 60947-7-4:2019-01

Ambient conditions

Ambient temperature (storage/transport)	-40 °C ... 70 °C
Relative humidity (storage/transport)	30 % ... 70 %
Ambient temperature (assembly)	-5 °C ... 100 °C
Ambient temperature (operation)	-40 °C ... 105 °C (Depending on the current carrying capacity/derating curve)

Packaging specifications

Type of packaging	packed in cardboard

Drawings

Dimensional drawing

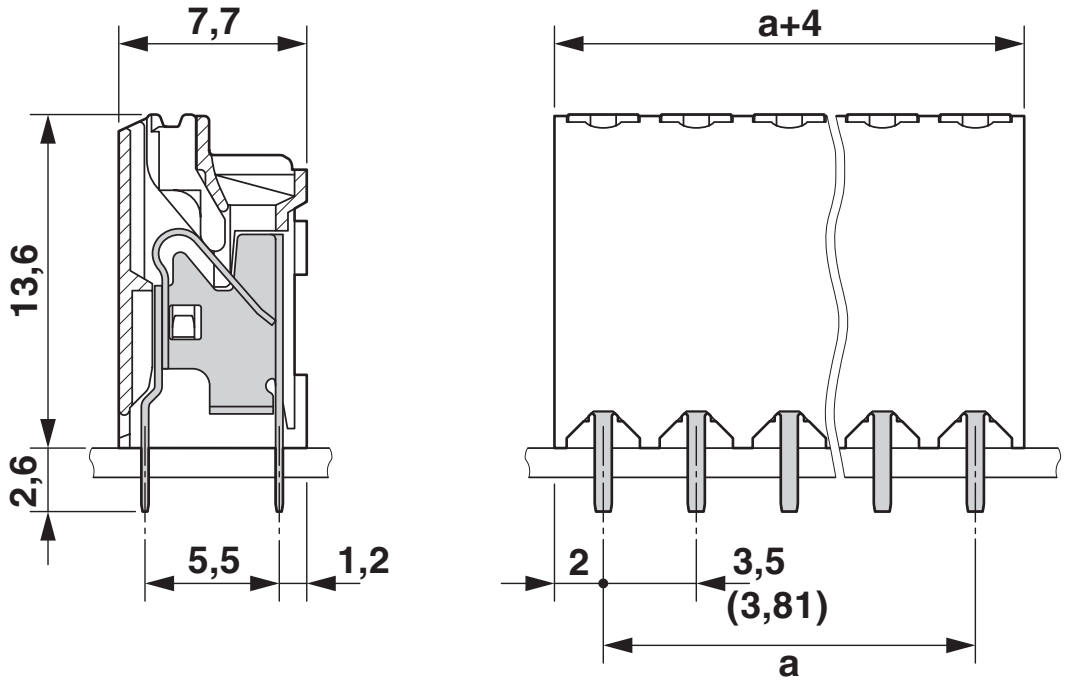

Diagram

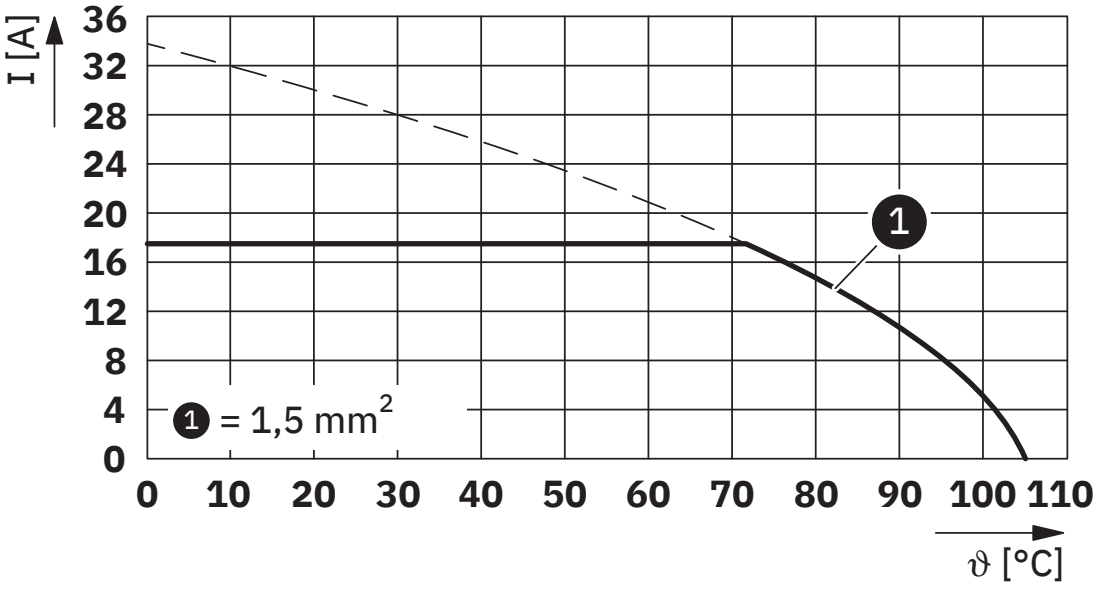

Type: SPT-THR 1,5/...-V-3,5 P...

Drilling plan/solder pad geometry

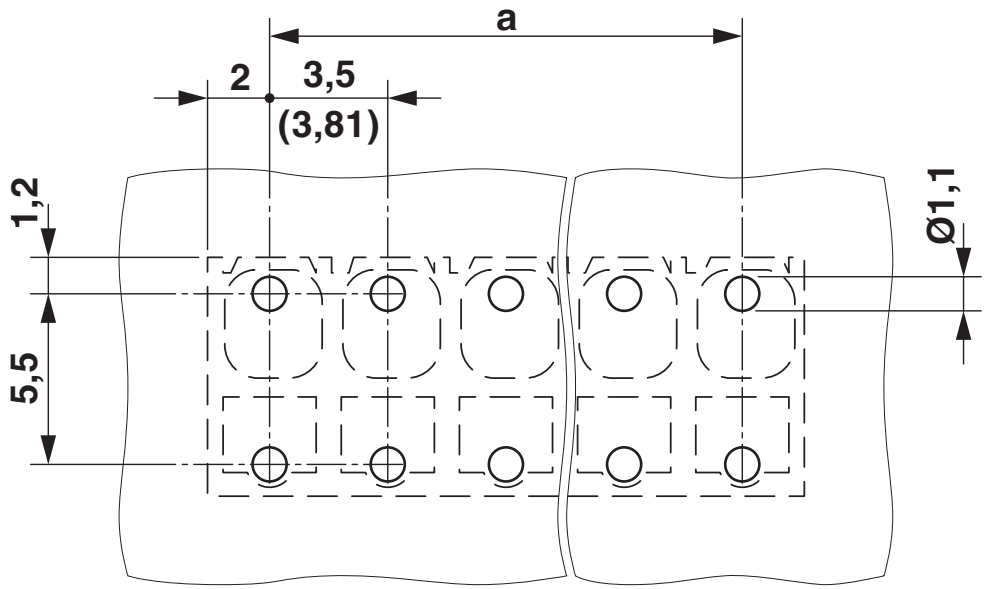

Approvals

To download certificates, visit the product detail page: https://www.phoenixcontact.com/us/products/1822325

cULus Recognized
Approval ID: E60425-20061129

	Nominal voltage U_N	Nominal current I_N	Cross section AWG	Cross section mm^2
B				
	300 V	10 A	24 - 16	-
D				
	300 V	10 A	24 - 16	-

VDE Zeichengenehmigung
Approval ID: 40046113

	Nominal voltage U_N	Nominal current I_N	Cross section AWG	Cross section mm^2
keine				
	160 V	17.5 A	-	0.2 - 1.5

Classifications

ECLASS

ECLASS-13.0	27460101
ECLASS-15.0	27460101

ETIM

ETIM 10.0	EC002643

UNSPSC

UNSPSC 21.0	39121400

Environmental product compliance

EU RoHS

Fulfills EU RoHS substance requirements	Yes, No exemptions

China RoHS

Environment friendly use period (EFUP)	EFUP-E
	No hazardous substances above the limits

EU REACH SVHC

REACH candidate substance (CAS No.)	No substance above 0.1 wt%

EF3.1 Climate Change

CO2e kg	0.012 kg CO2e

Phoenix Contact 2026 © - all rights reserved
https://www.phoenixcontact.com

Phoenix Contact USA
586 Fulling Mill Road
Middletown, PA 17057, United States
(+717) 944-1300
info@phoenixcon.com