# MCV 1,5/ 8-G-3,81 - PCB header

1803484

https://www.phoenixcontact.com/us/products/1803484

Please be informed that the data shown in this PDF document is generated from our online catalog. Please find the complete data in the user documentation. Our general terms of use for downloads are valid.




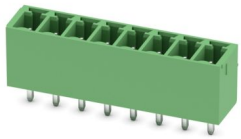

PCB headers, nominal cross section: 1.5 mm$^2$, color: green, nominal current: 8 A, rated voltage (III/2): 160 V, contact surface: Sn, contact connection type: Pin, number of potentials: 8, number of rows: 1, number of positions: 8, number of connections: 8, product range: MCV 1,5/..-G, pitch: 3.81 mm, mounting: Wave soldering, pin layout: Linear pinning, solder pin [P]: 3.4 mm, number of solder pins per potential: 1, plug-in system: COMBICON MC 1,5, Pin connector pattern alignment: Standard, locking: without, mounting method: without, type of packaging: packed in cardboard

## Your advantages

- Well-known mounting principle allows worldwide use
- Vertical connection enables multi-row arrangement on the PCB
- Maximum flexibility when it comes to device design – one header for connectors with different connection technologies

## Commercial data

| | |
|---|---|
| Item number | 1803484 |
| Packing unit | 100 pc |
| Minimum order quantity | 100 pc |
| Sales key | AA02 |
| Product key | AABSBE |
| GTIN | 4017918045791 |
| Weight per piece (including packing) | 2.24 g |
| Weight per piece (excluding packing) | 2 g |
| Customs tariff number | 85366930 |
| Country of origin | DE |

## Technical data

### Product properties

| | |
|---|---|
| Product type | PCB headers |
| Product family | MCV 1,5/..-G |
| Product line | COMBICON Connectors S |
| Type | Standard |
| Number of positions | 8 |
| Pitch | 3.81 mm |
| Number of connections | 8 |
| Number of rows | 1 |
| Number of potentials | 8 |
| Mounting type | without |
| Pin layout | Linear pinning |
| Solder pins per potential | 1 |

Fitting of components

| | |
|---|---|
| Partial assembly | No |

### Electrical properties

Properties

| | |
|---|---|
| Nominal current $I_N$ | 8 A |
| Nominal voltage $U_N$ | 160 V |
| Contact resistance | 1.4 mΩ |
| Rated voltage (III/3) | 160 V |
| Rated surge voltage (III/3) | 2.5 kV |
| Rated voltage (III/2) | 160 V |
| Rated surge voltage (III/2) | 2.5 kV |
| Rated voltage (II/2) | 250 V |
| Rated surge voltage (II/2) | 2.5 kV |

### Mounting

| | |
|---|---|
| Mounting type | Wave soldering |
| Pin layout | Linear pinning |

### Material specifications

Material data - contact

| | |
|---|---|
| Note | WEEE/RoHS-compliant, free of whiskers according to IEC 60068-2-82/JEDEC JESD 201 |
| Contact material | Cu alloy |
| Surface characteristics | Tin-plated |
| Metal surface contact area (top layer) | Tin (3 µm - 5 µm Sn) |
| Metal surface contact area (middle layer) | Nickel (1.3 µm - 3 µm Ni) |

| | |
|---|---|
| Metal surface soldering area (top layer) | Tin (3 µm - 5 µm Sn) |
| Metal surface soldering area (middle layer) | Nickel (1.3 µm - 3 µm Ni) |

Material data - housing

| | |
|---|---|
| Color (Housing) | green (6021) |
| Insulating material | PBT |
| Insulating material group | IIIa |
| CTI according to IEC 60112 | 225 |
| Flammability rating according to UL 94 | V0 |

## Dimensions

| | |
|---|---|
| Dimensional drawing | 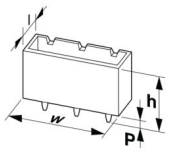 |
| Pitch | 3.81 mm |
| Width [w] | 31.87 mm |
| Height [h] | 12.6 mm |
| Length [l] | 7.25 mm |
| Installed height | 9.2 mm |
| Solder pin length [P] | 3.4 mm |
| Pin dimensions | 0.8 x 0.8 mm |

PCB design

| | |
|---|---|
| Hole diameter | 1.2 mm |

## Mechanical tests

Visual inspection

| | |
|---|---|
| Specification | IEC 60512-1-1:2002-02 |
| Result | Test passed |

Dimension check

| | |
|---|---|
| Specification | IEC 60512-1-2:2002-02 |
| Result | Test passed |

Resistance of inscriptions

| | |
|---|---|
| Specification | IEC 60068-2-70:1995-12 |
| Result | Test passed |

Polarization and coding

| | |
|---|---|
| Specification | IEC 60512-13-5:2006-02 |
| Result | Test passed |

Contact holder in insert

| | |
|---|---|
| Specification | IEC 60512-15-1:2008-05 |

| | |
|---|---|
| Contact holder in insert<br>Requirements >20 N | Test passed |

Insertion and withdrawal forces

| | |
|---|---|
| Specification | IEC 60512-13-2:2006-02 |
| Result | Test passed |
| No. of cycles | 25 |
| Insertion strength per pos. approx. | 7 N |
| Withdraw strength per pos. approx. | 5 N |

## Electrical tests

Thermal test | Test group C

| | |
|---|---|
| Specification | IEC 60512-5-1:2002-02 |
| Tested number of positions | 16 |

Insulation resistance

| | |
|---|---|
| Specification | IEC 60512-3-1:2002-02 |
| Insulation resistance, neighboring positions | > 5 MΩ |

Air clearances and creepage distances |

| | |
|---|---|
| Specification | IEC 60664-1:2020-05 |
| Insulating material group | IIIa |
| Comparative tracking index (IEC 60112) | CTI 225 |
| Rated insulation voltage (III/3) | 160 V |
| Rated surge voltage (III/3) | 2.5 kV |
| minimum clearance value - non-homogenous field (III/3) | 1.5 mm |
| minimum creepage distance (III/3) | 2.5 mm |
| Rated insulation voltage (III/2) | 160 V |
| Rated surge voltage (III/2) | 2.5 kV |
| minimum clearance value - non-homogenous field (III/2) | 1.5 mm |
| minimum creepage distance (III/2) | 1.6 mm |
| Rated insulation voltage (II/2) | 250 V |
| Rated surge voltage (II/2) | 2.5 kV |
| minimum clearance value - non-homogenous field (II/2) | 1.5 mm |
| minimum creepage distance (II/2) | 2.5 mm |

## Environmental and real-life conditions

Durability test

| | |
|---|---|
| Specification | IEC 60512-9-1:2010-03 |
| Impulse withstand voltage at sea level | 2.95 kV |
| Contact resistance $R_1$ | 1.4 mΩ |
| Contact resistance $R_2$ | 1.5 mΩ |
| Insertion/withdrawal cycles | 25 |
| Insulation resistance, neighboring positions | > 5 MΩ |

Climatic test

| | |
|---|---|
| Specification | ISO 6988:1985-02 |
| Corrosive stress | 0.2 $dm^3$ $SO_2$ on 300 $dm^3$/40 °C/1 cycle |
| Thermal stress | 105 °C/168 h |
| Power-frequency withstand voltage | 1.39 kV |

Vibration test

| | |
|---|---|
| Specification | IEC 60068-2-6:2007-12 |
| Frequency | 10 - 150 - 10 Hz |
| Sweep speed | 1 octave/min |
| Amplitude | 0.35 mm (10 Hz ... 60.1 Hz) |
| Acceleration | 5g (60.1 Hz ... 150 Hz) |
| Test duration per axis | 2.5 h |
| Test directions | X-, Y- and Z-axis |

Ambient conditions

| | |
|---|---|
| Ambient temperature (storage/transport) | -40 °C ... 70 °C |
| Relative humidity (storage/transport) | 30 % ... 70 % |
| Ambient temperature (assembly) | -5 °C ... 100 °C |
| Ambient temperature (operation) | -40 °C ... 105 °C (dependent on the derating curve) |

## Packaging specifications

| | |
|---|---|
| Type of packaging | packed in cardboard |

## Drawings

Dimensional drawing

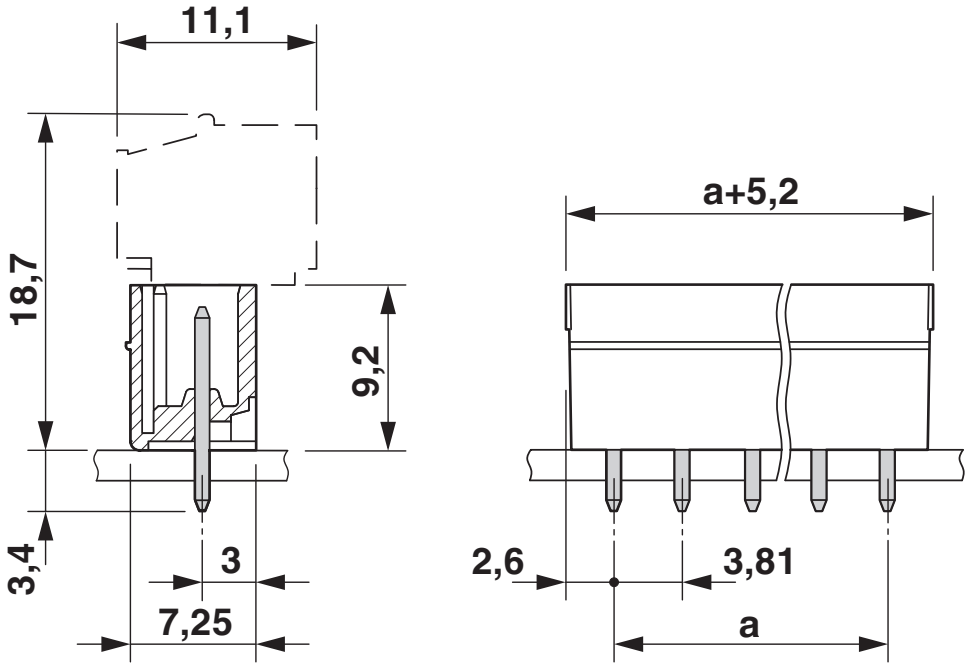


Diagram

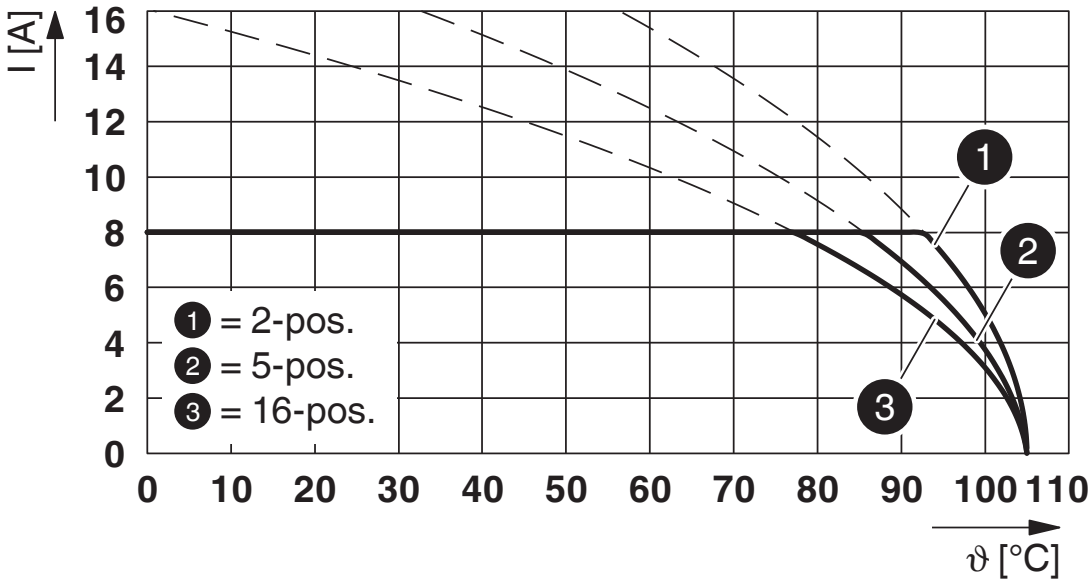


Type: LPC 1,5/...-ST-3,81 with MCV 1,5/...-G-3,81

Diagram

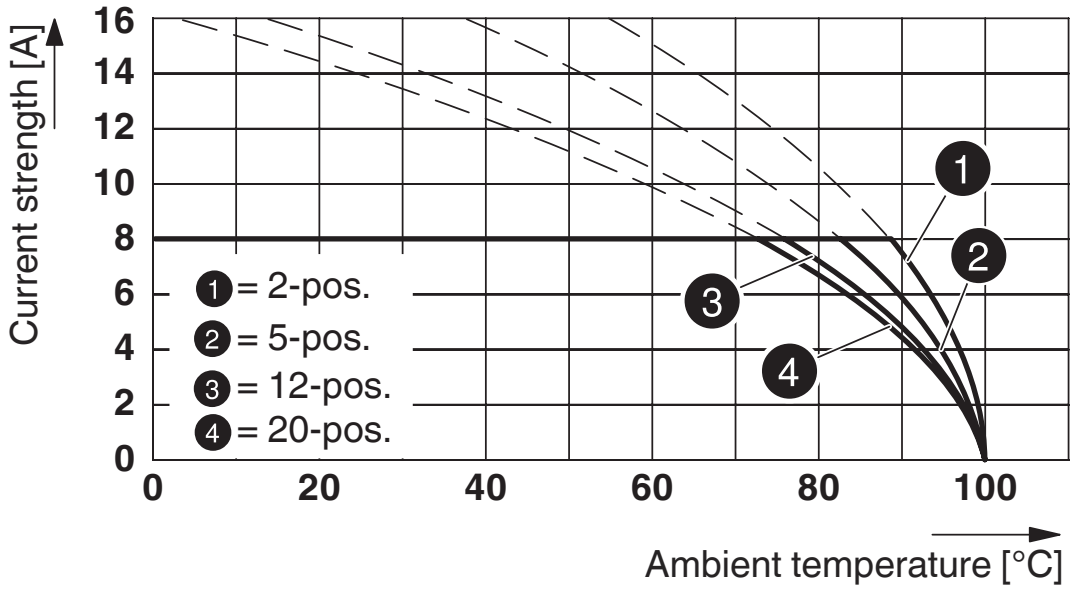


Type: MC 1,5/...-ST-3,81 with MCV 1,5/...-G-3,81

Diagram

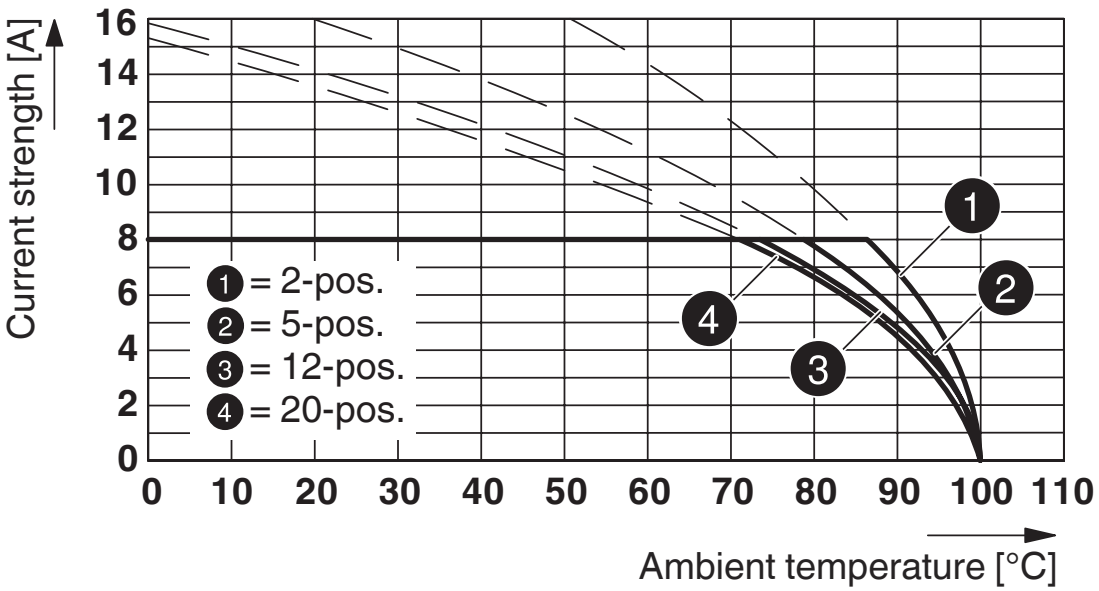


Type: FRONT-MC 1,5/...-ST-3,81 with MCV 1,5/...-G-3,81

Diagram

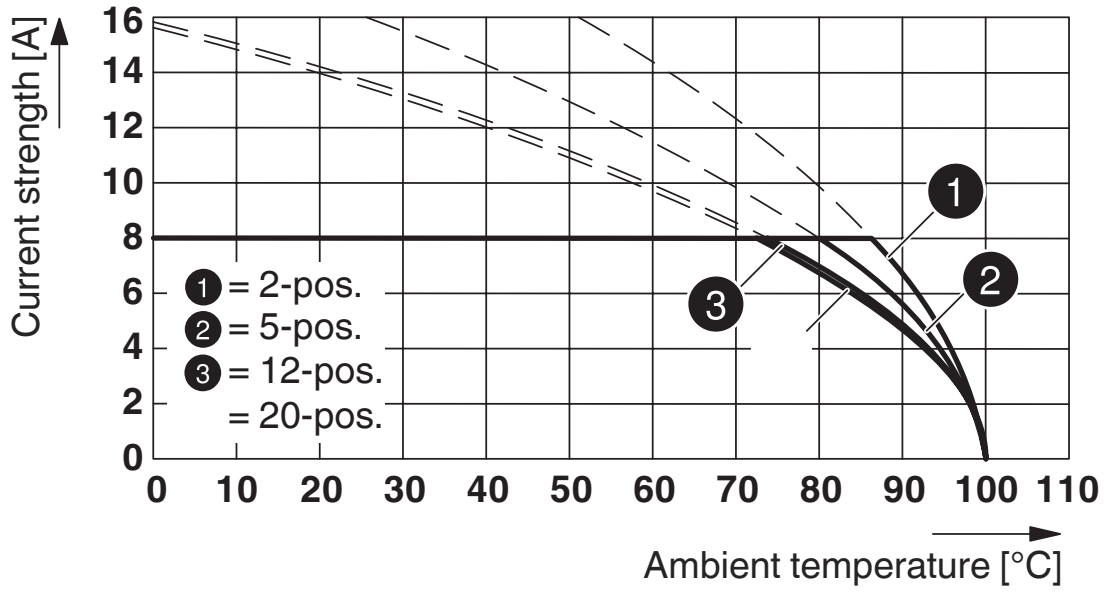


Type: FK-MCP 1,5/...-ST-3,81 with MCV 1,5/...-G-3,81

Diagram

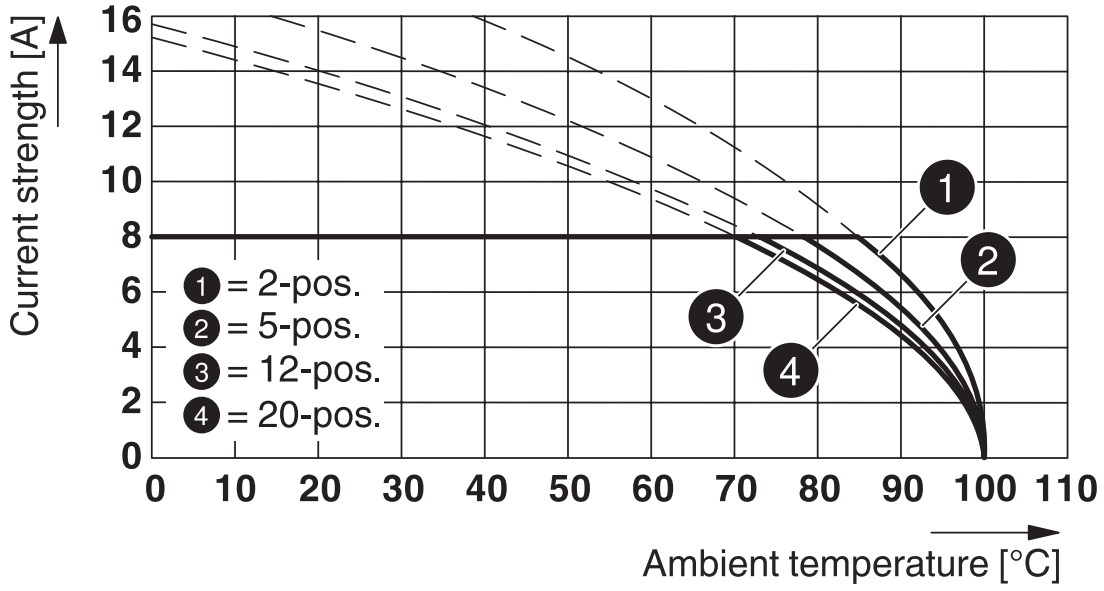


Type: FMC 1,5/...-ST-3,81 with MCV 1,5/...-G-3,81

Diagram

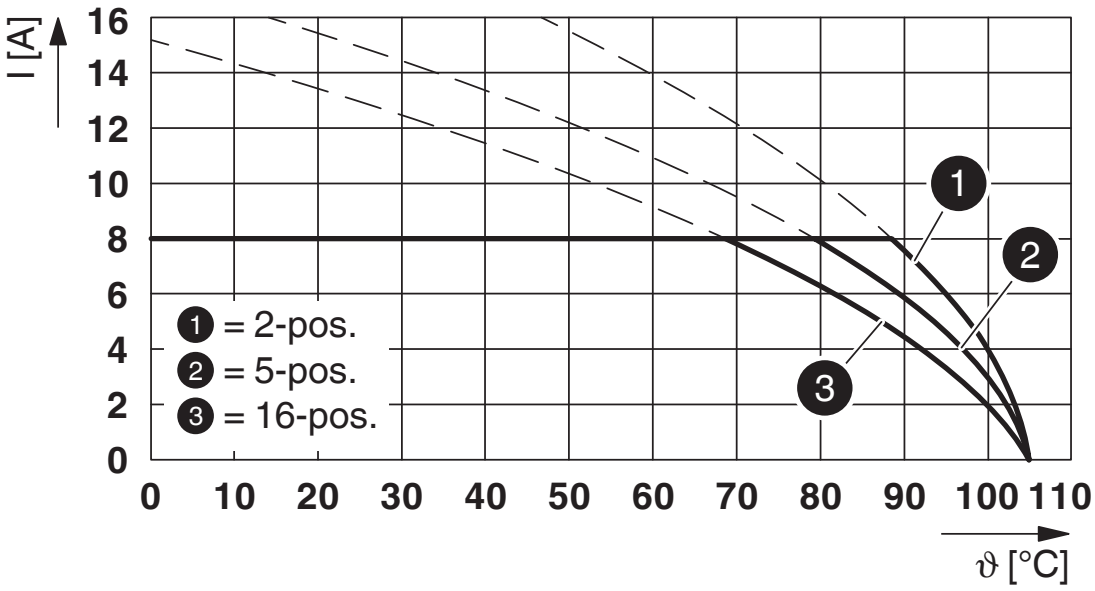


Type: IMC 1,5/...-G-3,81 with MCV 1,5/...-G-3,81

Drilling plan/solder pad geometry

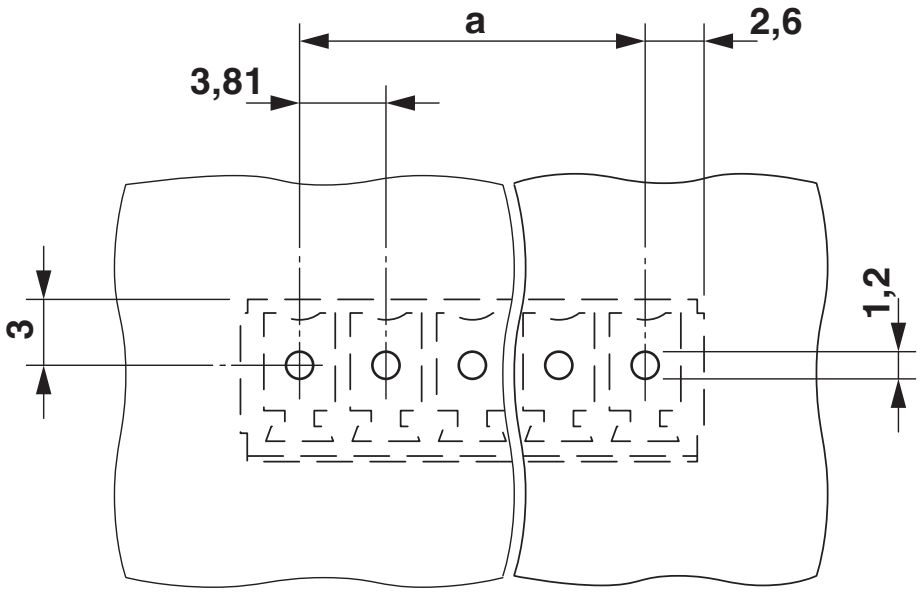

## Approvals

To download certificates, visit the product detail page: https://www.phoenixcontact.com/us/products/1803484

**CSA**
Approval ID: 13631

| | Nominal voltage $U_N$ | Nominal current $I_N$ | Cross section AWG | Cross section $mm^2$ |
|---|---|---|---|---|
| B | | | | |
| | 300 V | 8 A | - | - |
| D | | | | |
| | 300 V | 8 A | - | - |

**cULus Recognized**
Approval ID: E60425-20110128

| | Nominal voltage $U_N$ | Nominal current $I_N$ | Cross section AWG | Cross section $mm^2$ |
|---|---|---|---|---|
| B | | | | |
| | 300 V | 8 A | - | - |
| D | | | | |
| | 300 V | 8 A | - | - |

**VDE Zeichengenehmigung**
Approval ID: 40011723

| | Nominal voltage $U_N$ | Nominal current $I_N$ | Cross section AWG | Cross section $mm^2$ |
|---|---|---|---|---|
| keine | | | | |
| | 160 V | 8 A | - | - |

## Classifications

### ECLASS

| | |
|---|---|
| ECLASS-13.0 | 27460201 |
| ECLASS-15.0 | 27460201 |

### ETIM

| | |
|---|---|
| ETIM 10.0 | EC002637 |

### UNSPSC

| | |
|---|---|
| UNSPSC 21.0 | 39121400 |

## Environmental product compliance

EU RoHS

| | |
|---|---|
| Fulfills EU RoHS substance requirements | Yes, No exemptions |

China RoHS

| | |
|---|---|
| Environment friendly use period (EFUP) | EFUP-E |
| | No hazardous substances above the limits |

EU REACH SVHC

| | |
|---|---|
| REACH candidate substance (CAS No.) | No substance above 0.1 wt% |


Phoenix Contact 2026 © - all rights reserved
https://www.phoenixcontact.com



Phoenix Contact USA
586 Fulling Mill Road
Middletown, PA 17057, United States
(+717) 944-1300
info@phoenixcon.com