MKDS 1/ 8-3,81 SMD BK - PCB terminal block

1727175

https://www.phoenixcontact.com/us/products/1727175

Please be informed that the data shown in this PDF document is generated from our online catalog. Please find the complete data in the user documentation. Our general terms of use for downloads are valid.





The figure shows a 10-position version of the product

PCB terminal block, nominal current: 8 A, rated voltage (III/2): 160 V, nominal cross section: 1 mm^2, number of potentials: 8, number of rows: 1, number of positions per row: 8, product range: MKDS 1/..-SMD, pitch: 3.81 mm, connection method: Screw connection with tension sleeve, screw head form: L Slotted, mounting: SMD soldering, conductor/PCB connection direction: 0 °, color: black, Pin layout: Linear pad geometry, number of solder pins per potential: 1, type of packaging: Tube magazine

Your advantages

- Well-known connection principle allows worldwide use
- Low temperature rise, thanks to maximum contact force
- Allows connection of two conductors
- Extremely small design for the respective conductor cross-section
- Designed for integration into the SMT soldering process

Commercial data

Item number	1727175
Packing unit	14 pc
Minimum order quantity	14 pc
Note	Made to order (non-returnable)
Sales key	AA12
Product key	AALHAB
GTIN	4017918025595
Weight per piece (including packing)	8.214 g
Weight per piece (excluding packing)	5.963 g
Customs tariff number	85369010
Country of origin	PL

Technical data

Product properties

Product type	PCB terminal block
Product family	MKDS 1/..-SMD
Product line	COMBICON Terminals S
Type	PC termination block
Number of positions	8
Pitch	3.81 mm
Number of connections	8
Number of rows	1
Number of potentials	8
Pin layout	Linear pad geometry
Solder pins per potential	1

Fitting of components

Partial assembly	No

Electrical properties

Properties

Nominal current I_N	8 A
Nominal voltage U_N	160 V
Rated voltage (III/3)	160 V
Rated surge voltage (III/3)	2.5 kV
Rated voltage (III/2)	160 V
Rated surge voltage (III/2)	2.5 kV
Rated voltage (II/2)	250 V
Rated surge voltage (II/2)	2.5 kV

Connection data

Connection technology

Type	PC termination block
Nominal cross section	1 mm²

Conductor connection

Connection method	Screw connection with tension sleeve
Conductor cross-section rigid	0.14 mm² ... 1.5 mm²
Conductor cross-section flexible	0.14 mm² ... 1 mm²
Conductor cross-section AWG	26 ... 16
Conductor cross-section, flexible, with ferrule, without plastic sleeve	0.25 mm² ... 0.5 mm²
Conductor cross-section, flexible, with ferrule, with plastic sleeve	0.25 mm² ... 0.5 mm²
2 conductors with same cross section, rigid	0.14 mm² ... 0.5 mm²
2 conductors with same cross section, flexible	0.14 mm² ... 0.2 mm²

Stripping length	5 mm
Drive form screw head	Slotted (L)
Tightening torque	0.22 Nm ... 0.25 Nm

Mounting

Mounting type	SMD soldering
Pin layout	Linear pad geometry

Material specifications

Material data - contact

Note	WEEE/RoHS-compliant, free of whiskers according to IEC 60068-2-82/JEDEC JESD 201
Contact material	Cu alloy
Surface characteristics	Tin-plated
Metal surface terminal point (top layer)	Tin (5 µm - 7 µm Sn)
Metal surface terminal point (middle layer)	Nickel (2 µm - 3 µm Ni)
Metal surface soldering area (top layer)	Tin (5 µm - 7 µm Sn)
Metal surface soldering area (middle layer)	Nickel (2 µm - 3 µm Ni)

Material data - housing

Color (Housing)	black (9005)
Insulating material	PA
Insulating material group	IIIa
CTI according to IEC 60112	250
Flammability rating according to UL 94	V0
Glow wire flammability index GWFI according to EN 60695-2-12	850
Glow wire ignition temperature GWIT according to EN 60695-2-13	775
Temperature for the ball pressure test according to EN 60695-10-2	125 °C

Notes

Note on application	Pick and place pads may protrude beyond the components. The PCB layout must ensure that collisions are avoided when components are assembled.

Dimensions

Dimensional drawing	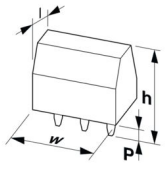
Pitch	3.81 mm
Width [w]	38.05 mm
Height [h]	9.2 mm

Length [l]	9.3 mm

PCB design

Pad geometry	1.5 x 2.5 mm

Mechanical tests

Test for conductor damage and slackening

Specification	IEC 60999-1:1999-11
Result	Test passed

Pull-out test

Specification	IEC 60999-1:1999-11
Conductor cross-section/conductor type/tractive force setpoint/actual value	0.14 mm² / solid / > 10 N
	0.14 mm² / flexible / > 10 N
	1.5 mm² / solid / > 40 N
	1 mm² / flexible / > 35 N

Electrical tests

Temperature-rise test

Specification	IEC 60947-7-4:2019-01
Requirement temperature-rise test	The sum of ambient temperature and temperature rise of the PCB terminal block shall not exceed the upper limiting temperature.

Short-time withstand current

Specification	IEC 60947-7-4:2019-01

Insulation resistance

Specification	IEC 60512-3-1:2002-02
Insulation resistance, neighboring positions	> 5 MΩ

Air clearances and creepage distances |

Specification	IEC 60947-1:2007-06 + A1:2010-12 + A2:2014-09
Insulating material group	IIIa
Comparative tracking index (IEC 60112)	CTI 250
Rated insulation voltage (III/3)	160 V
Rated surge voltage (III/3)	2.5 kV
minimum clearance value - non-homogenous field (III/3)	1.5 mm
minimum creepage distance (III/3)	2.5 mm
Rated insulation voltage (III/2)	160 V
Rated surge voltage (III/2)	2.5 kV
minimum clearance value - non-homogenous field (III/2)	1.5 mm
minimum creepage distance (III/2)	1.6 mm
Rated insulation voltage (II/2)	250 V
Rated surge voltage (II/2)	2.5 kV
minimum clearance value - non-homogenous field (II/2)	1.5 mm

minimum creepage distance (II/2)	2.5 mm

Environmental and real-life conditions

Vibration test

Specification	IEC 60068-2-6:2007-12
Frequency	10 - 150 - 10 Hz
Sweep speed	1 octave/min
Amplitude	0.35 mm (10 Hz ... 60.1 Hz)
Acceleration	5g (60.1 Hz ... 150 Hz)
Test duration per axis	2.5 h
Test directions	X-, Y- and Z-axis

Glow-wire test

Specification	IEC 60695-2-10:2013-04
Temperature	850 °C
Time of exposure	5 s

Aging

Specification	IEC 60947-7-4:2019-01

Ambient conditions

Ambient temperature (storage/transport)	-40 °C ... 70 °C
Relative humidity (storage/transport)	30 % ... 70 %
Ambient temperature (assembly)	-5 °C ... 100 °C
Ambient temperature (operation)	-40 °C ... 105 °C (Depending on the current carrying capacity/derating curve)

Packaging specifications

Type of packaging	Tube magazine

Drawings

Dimensional drawing

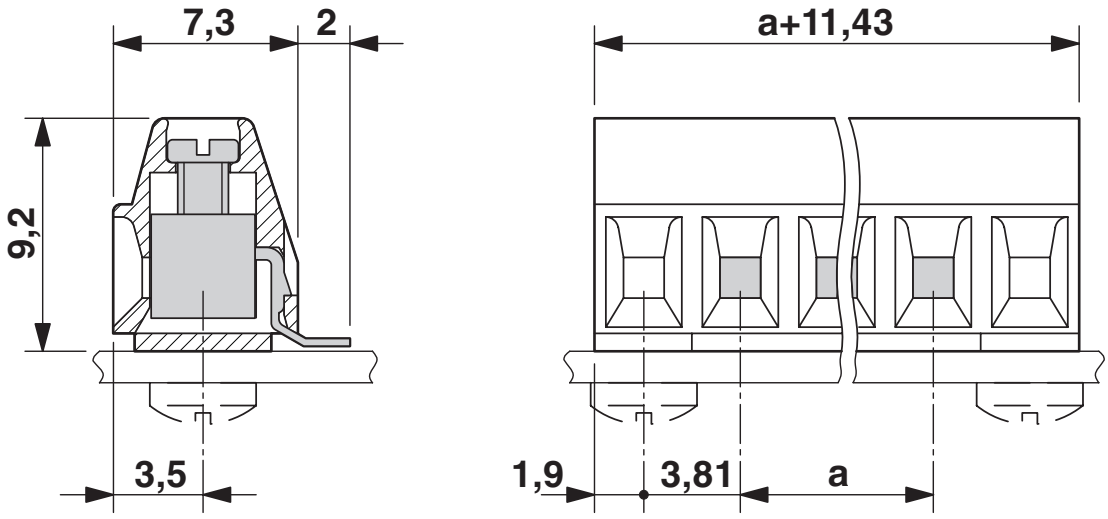

Diagram

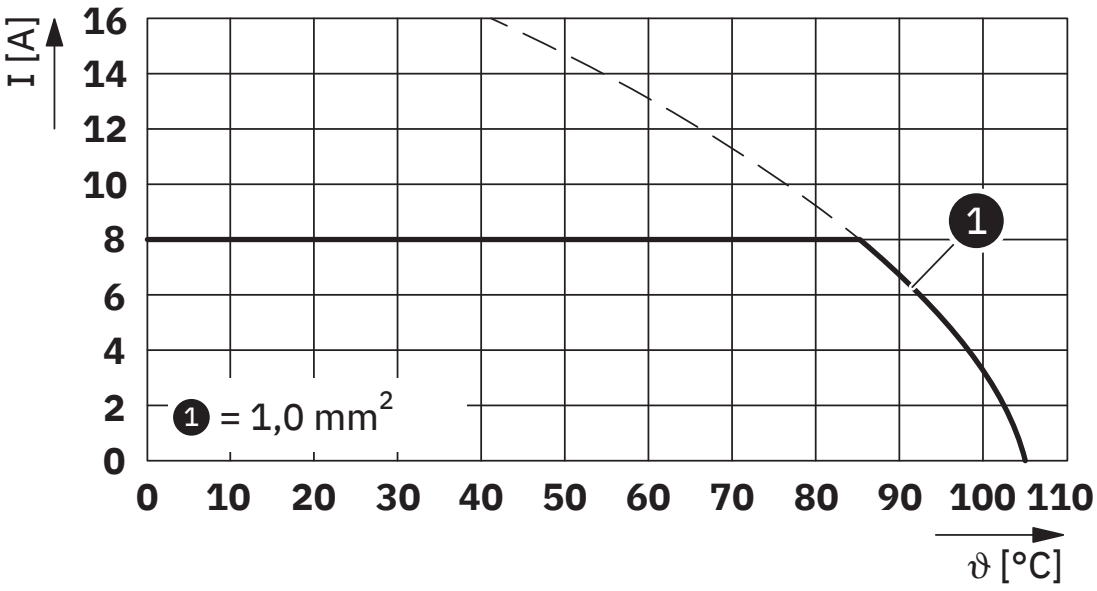

Type: MKDS 1/...-3,81 SMD BK

Drilling plan/solder pad geometry

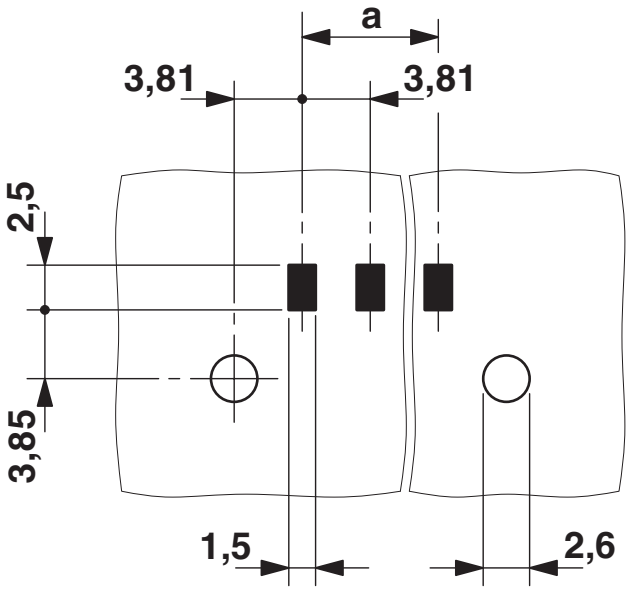

Approvals

To download certificates, visit the product detail page: https://www.phoenixcontact.com/us/products/1727175

cULus Recognized
Approval ID: E60425-19770427

	Nominal voltage U_N	Nominal current I_N	Cross section AWG	Cross section mm^2
B				
Only flexible conductors	300 V	13.5 A	30 - 16	-
Standard	300 V	10 A	30 - 16	-
D				
Only flexible conductors	150 V	13.5 A	30 - 16	-
Standard	300 V	10 A	30 - 16	-

VDE approval of drawings
Approval ID: 40055394

	Nominal voltage U_N	Nominal current I_N	Cross section AWG	Cross section mm^2
keine				
	200 V	17.5 A	-	0.2 - 1.5

Classifications

ECLASS

ECLASS-13.0	27460101
ECLASS-15.0	27460101

ETIM

ETIM 10.0	EC002643

UNSPSC

UNSPSC 21.0	39121400

Environmental product compliance

EU RoHS

Fulfills EU RoHS substance requirements	Yes, No exemptions

China RoHS

Environment friendly use period (EFUP)	EFUP-E
	No hazardous substances above the limits

EU REACH SVHC

REACH candidate substance (CAS No.)	No substance above 0.1 wt%

Phoenix Contact 2026 © - all rights reserved
https://www.phoenixcontact.com

Phoenix Contact USA
586 Fulling Mill Road
Middletown, PA 17057, United States
(+717) 944-1300
info@phoenixcon.com