HC-M-B16-MFH-H-CI - Module carrier frame

1721373

https://www.phoenixcontact.com/us/products/1721373

Please be informed that the data shown in this PDF document is generated from our online catalog. Please find the complete data in the user documentation. Our general terms of use for downloads are valid.



Module carrier frame, size: B16, type : for the sleeve side (A, B, C, ...), Push-in connection, 0.5 mm^2 ... 6 mm^2, application: Module carrier frame, For tool-free latching into high housings of the HC-STA and HC-EVO housing series

Your advantages

- Significant time savings and improved handling: Consistent and easy tool-free installation and mounting with Push-in connection technology and innovative Click-in latching
- Tool-free installation and mounting of the PE connection with Push-in connection technology
- Shortest installation time compared to other connection technologies
- Quick and effortless wiring, in particular when space is tight
- Secure installation: Audible and tangible latching of the contact inserts in the connector housing
- Reliable connection: The Click-in contact insert latches into the housing creating a shock- and vibration-resistant connection in accordance with DIN EN 61373
- Easy integration: Click-in contact inserts fit in all high plastic and metal housings of the HEAVYCON STANDARD and EVO series
- Safe wiring and operation with color-coded actuators
- Shock and vibration-resistant in accordance with DIN EN 61373

Commercial data

Item number	1721373
Packing unit	1 pc
Minimum order quantity	1 pc
Sales key	BF62
Product key	AF7ACD
GTIN	4067923274662
Weight per piece (including packing)	104.8 g
Weight per piece (excluding packing)	123.6 g
Customs tariff number	85389099
Country of origin	CN

Technical data

Notes

General	Connectors may be operated only when there is no load/voltage.

Product properties

Product type	Module carrier frame
Series	HC-M-B
	HC-M-02
	HC-M-03
	HC-M-03/04
	HC-M-04
	HC-M-05
	HC-M-06
	HC-M-08
	HC-M-08-GBIT
	HC-M-12
	HC-M-17
	HC-M-20
	HC-M-25
	HC-M-DSUB
	HC-M-EMV
	HC-M-HV
	HC-M-HS
	HC-M-00
Application	Module carrier frame
Type	B16
Number of module slots	4
Frame type	Module carrier frame

Connection data

Conductor connection

Conductor cross-section	0.5 mm² ... 6 mm² (for PE conductor)
Stripping length	8 mm ... 10 mm (for PE conductor)

Dimensions

Dimensional drawing	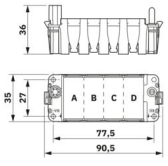
Width	34.9 mm

Height	36 mm
Length	84.5 mm

Material specifications

Contact carrier material	Die-cast zinc alloy

Mechanical properties

Mechanical data

Insertion/withdrawal cycles	≥ 500

Environmental and real-life conditions

Ambient conditions

Ambient temperature (operation)	-40 °C ... 125 °C

Mounting

Mounting type	Click-in latching
Assembly note	To ensure correct use, installation in housing with IP54 protection or better is required
	tool-free snap-in into tall plastic housing of the HEAVYCON EVO series and into tall metal housing of the HEAVYCON STANDARD and ADVANCED series as well as metal housing with straight cable entry

Drawings

Dimensional drawing

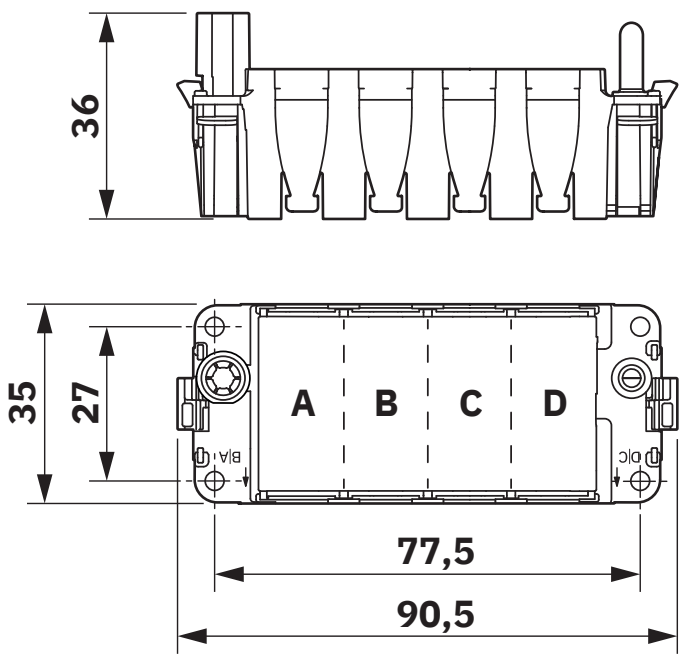

Dimensional drawing

Approvals

To download certificates, visit the product detail page: https://www.phoenixcontact.com/us/products/1721373

CSA
Approval ID: 158887

UL Recognized
Approval ID: E468743

	Nominal voltage U_N	Nominal current I_N	Cross section AWG	Cross section mm^2
keine				
PE connection	-	-	- 10	-

Classifications

ECLASS

ECLASS-13.0	27440206
ECLASS-15.0	27440206

ETIM

ETIM 10.0	EC002312

UNSPSC

UNSPSC 21.0	31261500

Environmental product compliance

EU RoHS

Fulfills EU RoHS substance requirements	Yes, No exemptions

China RoHS

Environment friendly use period (EFUP)	EFUP-E
	No hazardous substances above the limits

EU REACH SVHC

REACH candidate substance (CAS No.)	No substance above 0.1 wt%

Phoenix Contact 2026 © - all rights reserved
https://www.phoenixcontact.com

Phoenix Contact USA
586 Fulling Mill Road
Middletown, PA 17057, United States
(+717) 944-1300
info@phoenixcon.com