# MKDS 5/ 2-6,35 - PCB terminal block

1714955

https://www.phoenixcontact.com/us/products/1714955

Please be informed that the data shown in this PDF document is generated from our online catalog. Please find the complete data in the user documentation. Our general terms of use for downloads are valid.




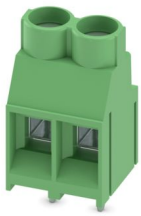

The design shown may differ from the original item due to production processes!

PCB terminal block, nominal current: 32 A, rated voltage (III/2): 630 V, nominal cross section: 4 mm$^2$, number of potentials: 2, number of rows: 1, number of positions per row: 2, product range: MKDS 5, pitch: 6.35 mm, connection method: Screw connection with tension sleeve, screw head form: L Slotted, mounting: Wave soldering, conductor/PCB connection direction: 0 °, color: green, Pin layout: Linear pinning, Solder pin [P]: 5.1 mm, number of solder pins per potential: 1, type of packaging: packed in cardboard. The article can be aligned to create different nos. of positions!

## Your advantages

- Well-known connection principle allows worldwide use
- Low temperature rise, thanks to maximum contact force
- Allows connection of two conductors
- The latching on the side enables various numbers of positions to be combined

## Commercial data

| | |
|---|---|
| Item number | 1714955 |
| Packing unit | 50 pc |
| Minimum order quantity | 50 pc |
| Sales key | AA14 |
| Product key | AANFDC |
| GTIN | 4017918024093 |
| Weight per piece (including packing) | 5.52 g |
| Weight per piece (excluding packing) | 5.152 g |
| Customs tariff number | 85369010 |
| Country of origin | DE |

# Technical data

## Product properties

| | |
|---|---|
| Product type | PCB terminal block |
| Product family | MKDS 5 |
| Product line | COMBICON Terminals L |
| Type | PC terminal block can be aligned |
| Number of positions | 2 |
| Pitch | 6.35 mm |
| Number of connections | 2 |
| Number of rows | 1 |
| Number of potentials | 2 |
| Pin layout | Linear pinning |
| Solder pins per potential | 1 |

### Fitting of components

| | |
|---|---|
| Partial assembly | No |

## Electrical properties

### Properties

| | |
|---|---|
| Nominal current $I_N$ | 32 A |
| Nominal voltage $U_N$ | 630 V |
| Rated voltage (III/3) | 500 V |
| Rated surge voltage (III/3) | 6 kV |
| Rated voltage (III/2) | 630 V |
| Rated surge voltage (III/2) | 6 kV |
| Rated voltage (II/2) | 1000 V |
| Rated surge voltage (II/2) | 6 kV |

## Connection data

### Connection technology

| | |
|---|---|
| Type | PC terminal block can be aligned |
| Nominal cross section | 4 mm² |

### Conductor connection

| | |
|---|---|
| Connection method | Screw connection with tension sleeve |
| Conductor cross-section rigid | 0.2 mm² ... 6 mm² |
| Conductor cross-section flexible | 0.2 mm² ... 4 mm² |
| Conductor cross-section AWG | 24 ... 10 |
| Conductor cross-section, flexible, with ferrule, without plastic sleeve | 0.25 mm² ... 4 mm² |
| Conductor cross-section, flexible, with ferrule, with plastic sleeve | 0.25 mm² ... 4 mm² |
| 2 conductors with same cross section, rigid | 0.2 mm² ... 2.5 mm² |
| 2 conductors with same cross section, flexible | 0.2 mm² ... 1.5 mm² |

| | |
|---|---|
| 2 conductors with same cross section, flexible, with ferrule without plastic sleeve | 0.25 mm² ... 0.75 mm² |
| 2 conductors with the same cross section, flexible, with TWIN ferrule with plastic sleeve | 0.5 mm² ... 2.5 mm² |
| Stripping length | 8 mm |
| Drive form screw head | Slotted (L) |
| Tightening torque | 0.5 Nm ... 0.6 Nm |

## Mounting

| | |
|---|---|
| Mounting type | Wave soldering |
| Pin layout | Linear pinning |

## Material specifications

Material data - contact

| | |
|---|---|
| Note | WEEE/RoHS-compliant, free of whiskers according to IEC 60068-2-82/JEDEC JESD 201 |
| Contact material | Cu alloy |
| Surface characteristics | Tin-plated |
| Metal surface terminal point (top layer) | Tin (4 µm - 8 µm Sn) |
| Metal surface soldering area (top layer) | Tin (4 µm - 8 µm Sn) |

Material data - housing

| | |
|---|---|
| Color (Housing) | green (6021) |
| Insulating material | PA |
| Insulating material group | I |
| CTI according to IEC 60112 | 600 |
| Flammability rating according to UL 94 | V0 |
| Glow wire flammability index GWFI according to EN 60695-2-12 | 850 |
| Glow wire ignition temperature GWIT according to EN 60695-2-13 | 775 |
| Temperature for the ball pressure test according to EN 60695-10-2 | 125 °C |

## Notes

| | |
|---|---|
| Note on application | For safe conductor connection, always adhere to a defined tightening torque. Particularly in the case of PCB terminal blocks with two or three positions, the individual solder pin for each contact point cannot compensate for this. That is why the terminal blocks must be supported during conductor connection (held with one hand, support on the housing). |

## Dimensions

| | |
|---|---|
| Dimensional drawing | 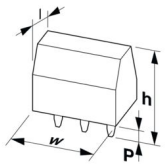 |

| | |
|---|---|
| Pitch | 6.35 mm |
| Width [w] | 12.7 mm |
| Height [h] | 26.6 mm |
| Length [l] | 12.5 mm |
| Installed height | 21.5 mm |
| Solder pin length [P] | 5.1 mm |
| Pin dimensions | 0.9 x 0.9 mm |

PCB design

| | |
|---|---|
| Hole diameter | 1.3 mm |

## Mechanical tests

Test for conductor damage and slackening

| | |
|---|---|
| Specification | IEC 60999-1:1999-11 |
| Result | Test passed |

Pull-out test

| | |
|---|---|
| Specification | IEC 60999-1:1999-11 |
| Conductor cross-section/conductor type/tractive force setpoint/actual value | 0.2 mm² / solid / > 10 N |
| | 0.2 mm² / flexible / > 10 N |
| | 6 mm² / solid / > 80 N |
| | 4 mm² / flexible / > 60 N |

## Electrical tests

Temperature-rise test

| | |
|---|---|
| Specification | IEC 60947-7-4:2019-01 |
| Requirement temperature-rise test | The sum of ambient temperature and temperature rise of the PCB terminal block shall not exceed the upper limiting temperature. |

Short-time withstand current

| | |
|---|---|
| Specification | IEC 60947-7-4:2019-01 |

Insulation resistance

| | |
|---|---|
| Specification | IEC 60512-3-1:2002-02 |
| Insulation resistance, neighboring positions | > 5 MΩ |

Air clearances and creepage distances |

| | |
|---|---|
| Specification | IEC 60947-7-4:2019-01 |
| Insulating material group | I |
| Comparative tracking index (IEC 60112) | CTI 600 |
| Rated insulation voltage (III/3) | 500 V |
| Rated surge voltage (III/3) | 6 kV |
| minimum clearance value - non-homogenous field (III/3) | 5.5 mm |
| minimum creepage distance (III/3) | 6.3 mm |
| Note on connection cross section | With connected conductor 6 mm² (solid). |

| | |
|---|---|
| Rated insulation voltage (III/2) | 630 V |
| Rated surge voltage (III/2) | 6 kV |
| minimum clearance value - non-homogenous field (III/2) | 5.5 mm |
| minimum creepage distance (III/2) | 5.5 mm |
| Rated insulation voltage (II/2) | 1000 V |
| Rated surge voltage (II/2) | 6 kV |
| minimum clearance value - non-homogenous field (II/2) | 5.5 mm |
| minimum creepage distance (II/2) | 5.5 mm |

## Environmental and real-life conditions

Vibration test

| | |
|---|---|
| Specification | IEC 60068-2-6:2007-12 |
| Frequency | 10 - 150 - 10 Hz |
| Sweep speed | 1 octave/min |
| Amplitude | 0.35 mm (10 Hz ... 60.1 Hz) |
| Acceleration | 5g (60.1 Hz ... 150 Hz) |
| Test duration per axis | 2.5 h |
| Test directions | X-, Y- and Z-axis |

Glow-wire test

| | |
|---|---|
| Specification | IEC 60695-2-10:2013-04 |
| Temperature | 850 °C |
| Time of exposure | 5 s |

Aging

| | |
|---|---|
| Specification | IEC 60947-7-4:2019-01 |

Ambient conditions

| | |
|---|---|
| Ambient temperature (storage/transport) | -40 °C ... 70 °C |
| Relative humidity (storage/transport) | 30 % ... 70 % |
| Ambient temperature (assembly) | -5 °C ... 100 °C |
| Ambient temperature (operation) | -40 °C ... 105 °C (Depending on the current carrying capacity/derating curve) |

## Packaging specifications

| | |
|---|---|
| Type of packaging | packed in cardboard |

## Drawings

Dimensional drawing

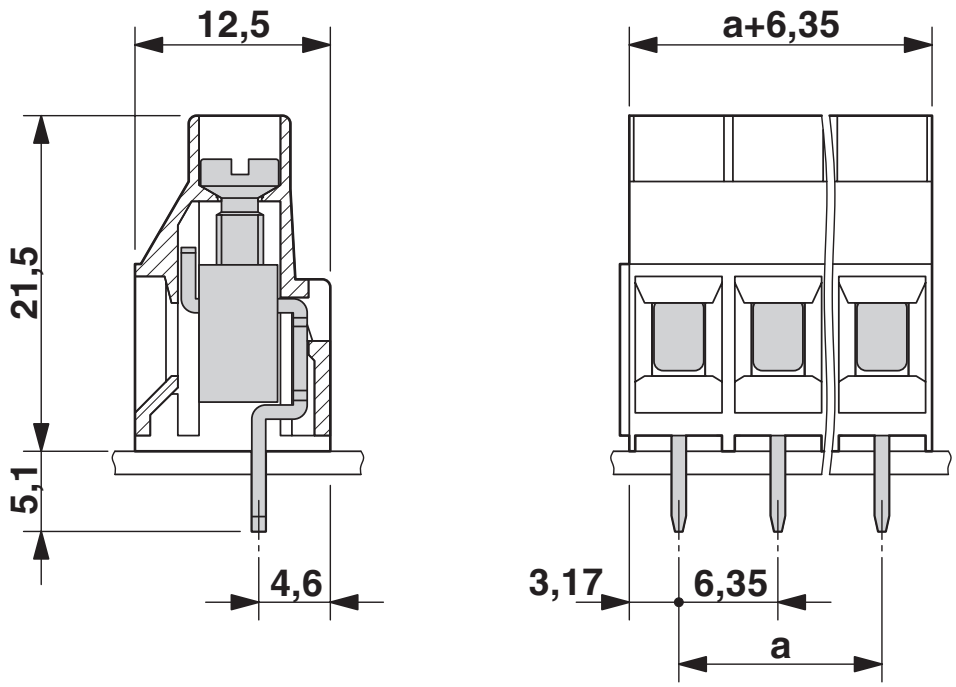


Diagram

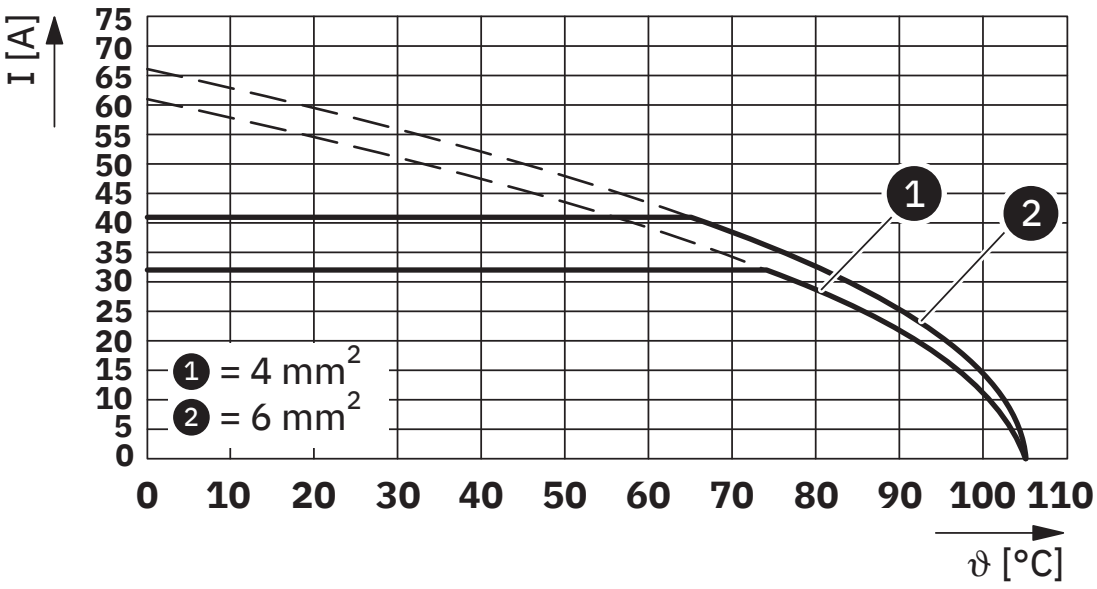


Type: MKDS 5/...-6,35

Drilling plan/solder pad geometry

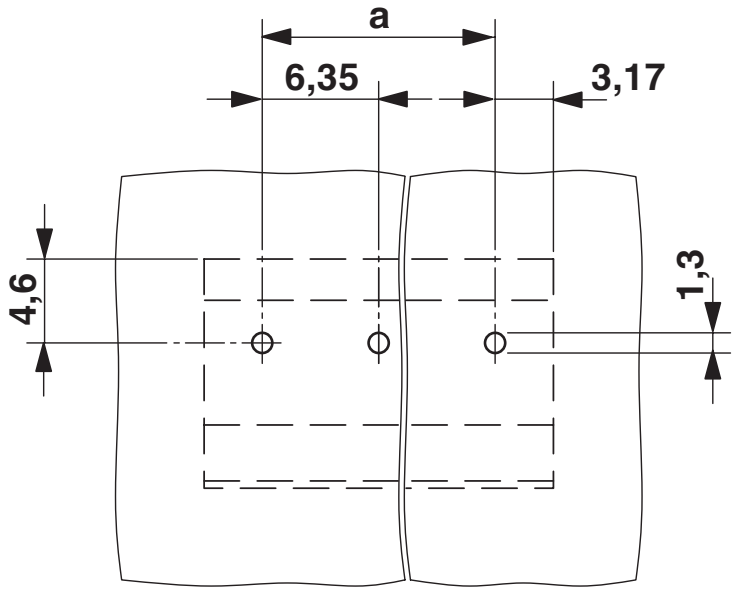

## Approvals

To download certificates, visit the product detail page: https://www.phoenixcontact.com/us/products/1714955

**CSA**
Approval ID: 13631

| | Nominal voltage $U_N$ | Nominal current $I_N$ | Cross section AWG | Cross section $mm^2$ |
|---|---|---|---|---|
| B | | | | |
| | 300 V | 10 A | 28 - 10 | - |
| D | | | | |
| | 300 V | 10 A | 28 - 10 | - |

**cULus Recognized**
Approval ID: E60425-19770427

| | Nominal voltage $U_N$ | Nominal current $I_N$ | Cross section AWG | Cross section $mm^2$ |
|---|---|---|---|---|
| B | | | | |
| | 300 V | 30 A | 30 - 10 | - |
| D | | | | |
| | 300 V | 10 A | 30 - 10 | - |

**DNV GL**
Approval ID: TAE00001EV

**VDE approval of drawings**
Approval ID: 40055394

| | Nominal voltage $U_N$ | Nominal current $I_N$ | Cross section AWG | Cross section $mm^2$ |
|---|---|---|---|---|
| keine | | | | |
| | 630 V | 32 A | - | 0.2 - 4 |

## Classifications

### ECLASS

| | |
|---|---|
| ECLASS-13.0 | 27460101 |
| ECLASS-15.0 | 27460101 |

### ETIM

| | |
|---|---|
| ETIM 10.0 | EC002643 |

### UNSPSC

| | |
|---|---|
| UNSPSC 21.0 | 39121400 |

## Environmental product compliance

EU RoHS

| | |
|---|---|
| Fulfills EU RoHS substance requirements | Yes, No exemptions |

China RoHS

| | |
|---|---|
| Environment friendly use period (EFUP) | EFUP-E |
| | No hazardous substances above the limits |

EU REACH SVHC

| | |
|---|---|
| REACH candidate substance (CAS No.) | No substance above 0.1 wt% |

EF3.1 Climate Change

| | |
|---|---|
| CO2e kg | 0.014 kg CO2e |


Phoenix Contact 2026 © - all rights reserved
https://www.phoenixcontact.com



Phoenix Contact USA
586 Fulling Mill Road
Middletown, PA 17057, United States
(+717) 944-1300
info@phoenixcon.com