IDC 0,3/ 9-3,81 - PCB terminal block

1706248

https://www.phoenixcontact.com/us/products/1706248

Please be informed that the data shown in this PDF document is generated from our online catalog. Please find the complete data in the user documentation. Our general terms of use for downloads are valid.



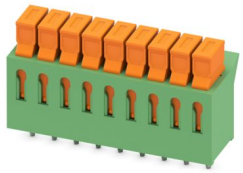

PCB terminal block, nominal current: 5 A, rated voltage (III/2): 160 V, nominal cross section: 0.34 mm^2, number of potentials: 9, number of rows: 1, number of positions per row: 9, product range: IDC 0,3, pitch: 3.81 mm, connection method: Displacement connection, mounting: Wave soldering, conductor/PCB connection direction: 0 °, color: green, Pin layout: Linear pinning, Solder pin [P]: 3.4 mm, number of solder pins per potential: 1, type of packaging: packed in cardboard

Your advantages

- Connection without conductor pretreatment for huge time savings
- Intuitive operation due to color-coded actuating push button

Commercial data

Item number	1706248
Packing unit	50 pc
Minimum order quantity	50 pc
Sales key	AA11
Product key	AAKJAA
GTIN	4017918116743
Weight per piece (including packing)	5.57 g
Weight per piece (excluding packing)	5.401 g
Customs tariff number	85369010
Country of origin	PL

Technical data

Product properties

Product type	PCB terminal block
Product family	IDC 0,3
Product line	COMBICON Terminals XS
Type	PC termination block
Number of positions	9
Pitch	3.81 mm
Number of connections	9
Number of rows	1
Number of potentials	9
Pin layout	Linear pinning
Solder pins per potential	1

Fitting of components

Partial assembly	No

Electrical properties

Properties

Nominal current I_N	5 A
Nominal voltage U_N	160 V
Rated voltage (III/3)	160 V
Rated surge voltage (III/3)	2.5 kV
Rated voltage (III/2)	160 V
Rated surge voltage (III/2)	2.5 kV
Rated voltage (II/2)	320 V
Rated surge voltage (II/2)	2.5 kV

Connection data

Connection technology

Type	PC termination block
Nominal cross section	0.34 mm²

Conductor connection

Connection method	Displacement connection
Conductor cross-section rigid	0.13 mm² ... 0.34 mm²
Conductor cross-section flexible	0.22 mm² ... 0.34 mm²
Conductor cross-section AWG	26 ... 22

Mounting

Mounting type	Wave soldering
Pin layout	Linear pinning

Material specifications

Material data - contact

Note	WEEE/RoHS-compliant, free of whiskers according to IEC 60068-2-82/JEDEC JESD 201
Contact material	Cu alloy
Surface characteristics	Tin-plated
Metal surface terminal point (top layer)	Tin (5 µm - 7 µm Sn)
Metal surface terminal point (middle layer)	Nickel (2 µm - 3 µm Ni)
Metal surface soldering area (top layer)	Tin (5 µm - 7 µm Sn)
Metal surface soldering area (middle layer)	Nickel (2 µm - 3 µm Ni)

Material data - housing

Color (Housing)	green (6021)
Insulating material	PA
Insulating material group	I
CTI according to IEC 60112	600
Flammability rating according to UL 94	V0
Glow wire flammability index GWFI according to EN 60695-2-12	850
Glow wire ignition temperature GWIT according to EN 60695-2-13	775
Temperature for the ball pressure test according to EN 60695-10-2	125 °C

Material data – actuating element

Insulating material	PA
Insulating material group	I
CTI according to IEC 60112	600
Flammability rating according to UL 94	V0
Glow wire flammability index GWFI according to EN 60695-2-12	850
Glow wire ignition temperature GWIT according to EN 60695-2-13	775
Temperature for the ball pressure test according to EN 60695-10-2	125 °C

Dimensions

Dimensional drawing	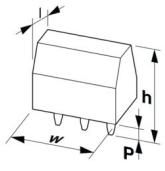
Pitch	3.81 mm
Width [w]	35.48 mm
Height [h]	22.2 mm
Length [l]	12.4 mm

Installed height	18.8 mm
Solder pin length [P]	3.4 mm
Pin dimensions	1 x 0.4 mm

PCB design

Hole diameter	1.3 mm

Electrical tests

Air clearances and creepage distances |

Specification	IEC 60664-1:2007-04
Insulating material group	I
Comparative tracking index (IEC 60112)	CTI 600
Rated insulation voltage (III/3)	160 V
Rated surge voltage (III/3)	2.5 kV
minimum clearance value - non-homogenous field (III/3)	1.5 mm
minimum creepage distance (III/3)	2 mm
Rated insulation voltage (III/2)	160 V
Rated surge voltage (III/2)	2.5 kV
minimum clearance value - non-homogenous field (III/2)	1.5 mm
minimum creepage distance (III/2)	1.5 mm
Rated insulation voltage (II/2)	320 V
Rated surge voltage (II/2)	2.5 kV
minimum clearance value - non-homogenous field (II/2)	1.5 mm
minimum creepage distance (II/2)	1.6 mm

Environmental and real-life conditions

Ambient conditions

Ambient temperature (storage/transport)	-40 °C ... 70 °C
Relative humidity (storage/transport)	30 % ... 70 %
Ambient temperature (assembly)	-5 °C ... 100 °C
Ambient temperature (operation)	-40 °C ... 100 °C (Depending on the current carrying capacity/derating curve)

Packaging specifications

Type of packaging	packed in cardboard

Drawings

Dimensional drawing

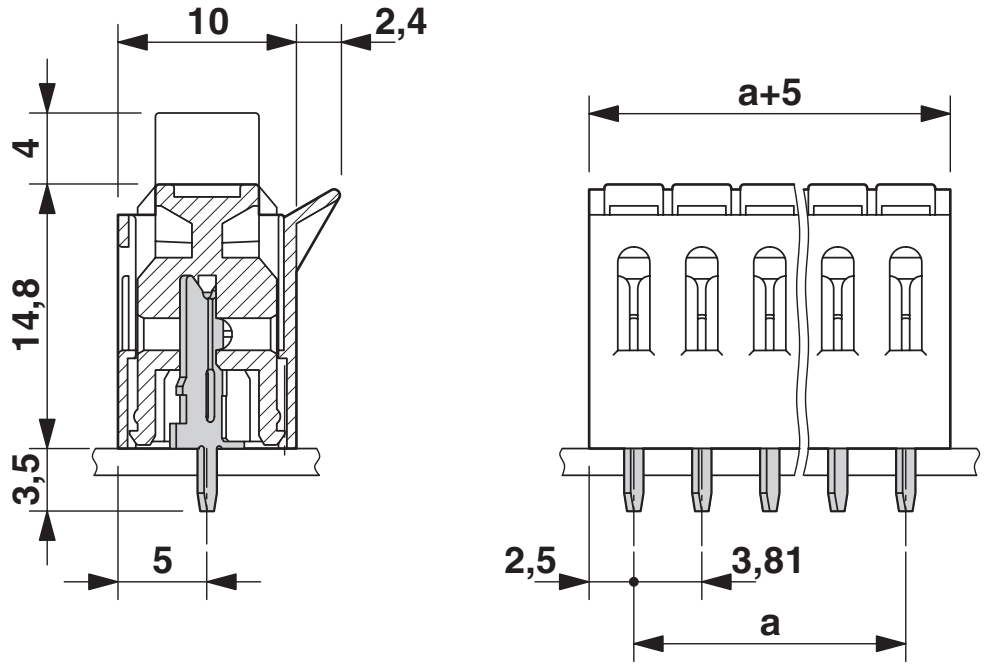

Diagram

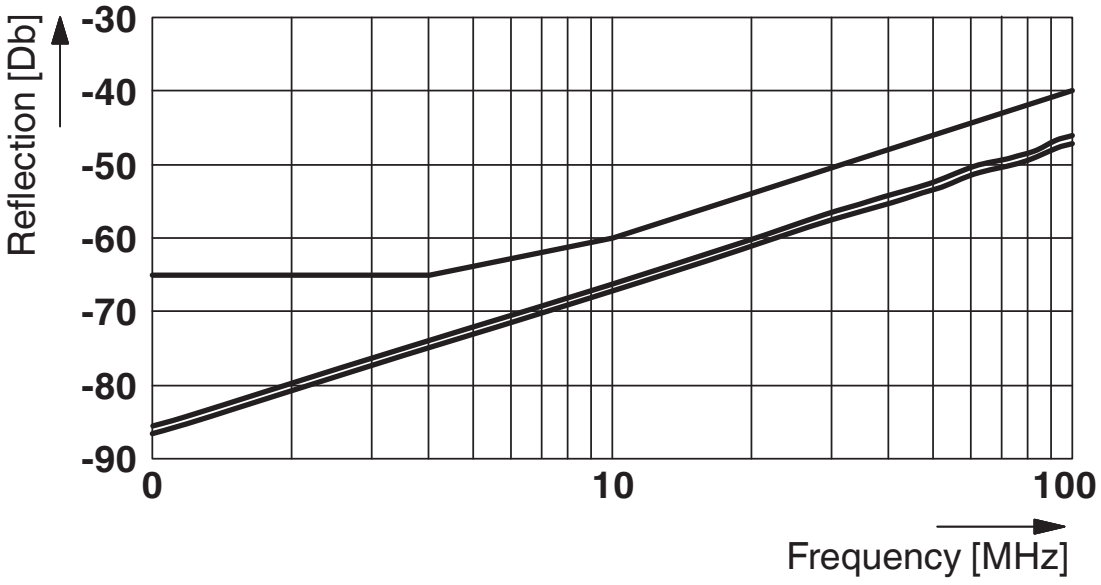

Diagram

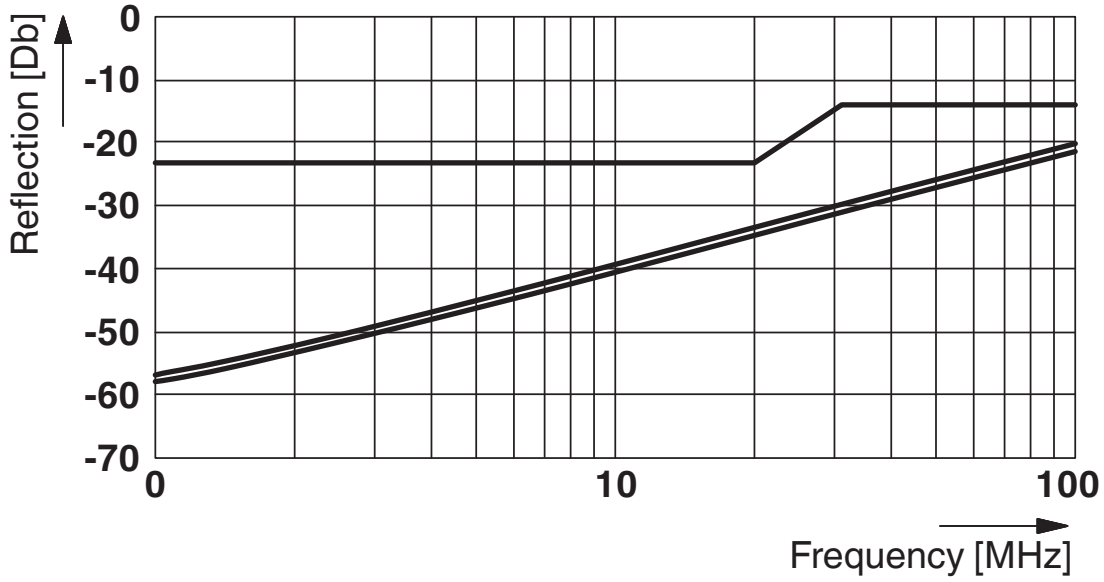

Drilling plan/solder pad geometry

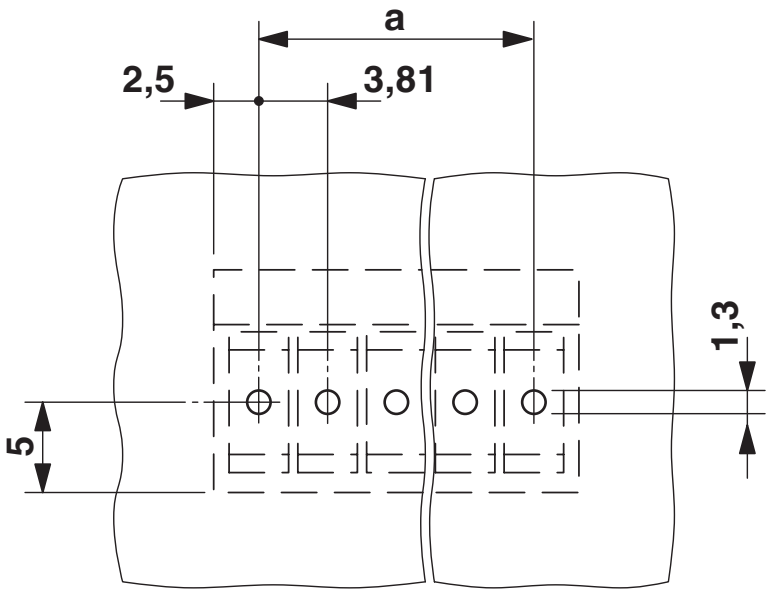

Approvals

To download certificates, visit the product detail page: https://www.phoenixcontact.com/us/products/1706248

CSA
Approval ID: 13631

	Nominal voltage U_N	Nominal current I_N	Cross section AWG	Cross section mm^2
B				
	300 V	5 A	28 - 22	-
D				
	300 V	5 A	28 - 22	-

cULus Recognized
Approval ID: E60425-19961206

	Nominal voltage U_N	Nominal current I_N	Cross section AWG	Cross section mm^2
B				
	250 V	5 A	28 - 22	-
D				
	300 V	5 A	28 - 22	-

Classifications

ECLASS

ECLASS-13.0	27460101
ECLASS-15.0	27460101

ETIM

ETIM 10.0	EC002643

UNSPSC

UNSPSC 21.0	39121400

Environmental product compliance

EU RoHS

Fulfills EU RoHS substance requirements	Yes, No exemptions

China RoHS

Environment friendly use period (EFUP)	EFUP-E
	No hazardous substances above the limits

EU REACH SVHC

REACH candidate substance (CAS No.)	No substance above 0.1 wt%

EF3.1 Climate Change

CO2e kg	0.089 kg CO2e

Phoenix Contact 2026 © - all rights reserved
https://www.phoenixcontact.com

Phoenix Contact USA
586 Fulling Mill Road
Middletown, PA 17057, United States
(+717) 944-1300
info@phoenixcon.com