SAC-3P-M12Y-2XM12FS/.../... - Sensor/actuator cable

1699766

https://www.phoenixcontact.com/us/products/1699766

Please be informed that the data shown in this PDF document is generated from our online catalog. Please find the complete data in the user documentation. Our general terms of use for downloads are valid.



Sensor/actuator cable, 3-position, Variable cable type, Plug straight M12, coding: A, on Socket straight M12, coding: A and Socket straight M12, coding: A, cable length: Free input (0.2 m ... 100.0 m)

Commercial data

Item number	1699766
Packing unit	1 pc
Minimum order quantity	1 pc
Note	Made to order (non-returnable)
Sales key	BF17
Product key	AF1COA
Customs tariff number	85444290
Country of origin	PL

Technical data

Product properties

Product type	Distributor with cable
Application	Standard
	Robots and drag chains
Number of positions	3
No. of cable outlets	2
Shielded	no
Coding	A

Insulation characteristics

Overvoltage category	II
Degree of pollution	3

Connection data

Tightening torque	0.4 Nm (M12 connector)

Material specifications

Flammability rating according to UL 94	HB
Seal material	NBR
Material of grip body	TPU, hardly inflammable, self-extinguishing
Contact material	CuSn
Contact surface material	Ni/Au
Contact carrier material	TPU GF
Material for screw connection	Zinc die-cast, nickel-plated

Electrical properties

Insulation resistance	≥ 100 MΩ
Nominal voltage U_N	250 V AC
	250 V DC
Nominal current I_N	4 A
Test voltage	2500 V

Mechanical properties

Mechanical data

Insertion/withdrawal cycles	≥ 100

Signaling

Status display	no
Status display present	no

Connector

Connection 1

Type	Plug straight M12
Coding type	A

Connection 2

Type	Socket straight M12
Coding type	A

Connection 3

Type	Socket straight M12
Coding type	A

Cable/line

Cable length	Free input (0.2 m ... 100.0 m)

PUR halogen-free black [PUR]

Dimensional drawing	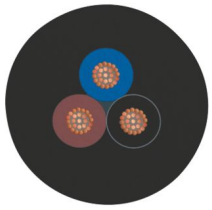
Cable weight	23 kg/km
UL AWM Style	20549
Number of positions	3
Shielded	no
Cable type	PUR halogen-free black [PUR]
	PUR halogen-free black PUR
Conductor structure signal line	42x 0.10 mm
AWG signal line	22
Conductor cross-section	3x 0.34 mm² (Signal line)
Wire diameter incl. insulation	1.27 mm ±0.02 mm (Signal line)
External cable diameter	3.85 mm ±0.15 mm
Outer sheath, material	PUR
External sheath, color	black-gray RAL 7021
Conductor material	Bare Cu litz wires
Material wire insulation	PP
Single wire, color	brown, blue, black
Thickness, insulation	≥ 0.21 mm (Core insulation)
	approx. 0.50 mm (Outer cable sheath)
Overall twist	3 wires, twisted
Max. conductor resistance	max. 58 Ω/km (at 20 °C)
Insulation resistance	≥ 100 GΩ*km (at 20 °C)

Nominal voltage, cable	≤ 300 V
Test voltage	≥ 3000 V
Smallest bending radius, fixed installation	19 mm
Smallest bending radius, movable installation	38 mm
Dynamic load capacity (bending)	Max. bending cycles: 10000000, Bending radius: 38 mm, Bending radius: 10 x D, Traversing path: 10 m, Traversing rate: 3 m/s, Acceleration: 10 m/s²
Dynamic load capacity (torsion)	Torsion: ±180 °/m, Torsion cycles: ≥5000000, Torsional frequency: 35 cycles/min.
Halogen-free	in accordance with DIN VDE 0472 part 815
Flame resistance	in accordance with UL 758/1581 FT2
	DIN EN 60332-2-2 (20 s)
Resistance to oil	in accordance with DIN EN 60811-2-1
Other resistance	Highly resistant to acids, alkaline solutions and solvents
	hydrolysis and microbe resistant
	partly UV-resistant (in accordance with DIN EN ISO 4892-2-A)
Special properties	Flexible cable conduit capable
	Silicone-free
	Free of substances which would hinder coating with paint or varnish
Ambient temperature (operation)	-40 °C ... 80 °C (cable, fixed installation)
	-25 °C ... 80 °C (Cable, flexible installation)

PUR/PVC orange [110]

Dimensional drawing	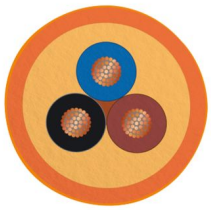
Cable weight	37 kg/km
Number of positions	3
Shielded	no
Cable type	PUR/PVC orange [110]
	PUR/PVC orange 110
Conductor structure signal line	42x 0.10 mm
AWG signal line	22
Conductor cross-section	0.34 mm²
Wire diameter incl. insulation	1.52 mm ±0.02 mm
External cable diameter	5.2 mm
	5.20 mm
Outer sheath, material	PUR
External sheath, color	orange RAL 2003

Conductor material	Bare Cu litz wires
Material wire insulation	PVC
Single wire, color	brown, blue, black
Thickness, insulation	≥ 0.23 mm (Core insulation)
	≥ 0.38 mm (Outer cable sheath)
	approx. 0.45 mm (Inner sheath)
Overall twist	3 wires, twisted
Max. conductor resistance	max. 57.3 Ω/km
Insulation resistance	≥ 100 MΩ*km
Nominal voltage, cable	300 V
Test voltage	2500 V
Smallest bending radius, fixed installation	52 mm
Smallest bending radius, movable installation	52 mm
Dynamic load capacity (bending)	Max. bending cycles: 2000000, Bending radius: 52 mm, Traversing path: 5 m, Traversing rate: 3 m/s
Ambient temperature (operation)	-25 °C ... 80 °C (cable, fixed installation)
	-5 °C ... 80 °C (Cable, flexible installation)

PUR/PVC yellow [140]

Dimensional drawing	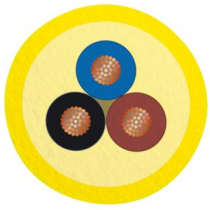
Cable weight	37 kg/km
Number of positions	3
Shielded	no
Cable type	PUR/PVC yellow [140]
	PUR/PVC yellow 140
Conductor structure signal line	42x 0.10 mm
AWG signal line	22
Conductor cross-section	0.34 mm²
Wire diameter incl. insulation	1.52 mm ±0.02 mm
External cable diameter	5.20 mm ±0.2 mm
Outer sheath, material	PUR
External sheath, color	yellow
Conductor material	Bare Cu litz wires
Material wire insulation	PVC
Single wire, color	brown, blue, black
Thickness, insulation	≥ 0.23 mm (Core insulation)
	≥ 0.38 mm (Outer cable sheath)

	approx. 0.45 mm (Inner sheath)
Overall twist	3 wires, twisted
Max. conductor resistance	max. 57.3 Ω/km (at 20 °C)
Insulation resistance	≥ 100 MΩ*km (at 20 °C)
Nominal voltage, cable	300 V
Test voltage	2500 V
Smallest bending radius, fixed installation	52 mm
Smallest bending radius, movable installation	52 mm
Dynamic load capacity (bending)	Max. bending cycles: 2000000, Bending radius: 52 mm, Traversing path: 5 m, Traversing rate: 3 m/s
Ambient temperature (operation)	-25 °C ... 80 °C (cable, fixed installation)
	-5 °C ... 80 °C (Cable, flexible installation)

PUR irradiated halogen-free orange [150]

Dimensional drawing	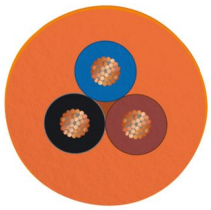
Number of positions	3
Shielded	no
Cable type	PUR irradiated halogen-free orange [150]
	PUR irradiated halogen-free orange 150
Conductor structure signal line	42x 0.10 mm
AWG signal line	22
Conductor cross-section	3x 0.34 mm² (Signal line)
Wire diameter incl. insulation	1.05 mm ±0.05 mm (Signal line)
External cable diameter	4.40 mm ±0.2 mm
Outer sheath, material	PUR
External sheath, color	orange RAL 2003
Conductor material	Bare Cu litz wires
Material wire insulation	PE
Single wire, color	brown, blue, black
Overall twist	3 wires, twisted
Max. conductor resistance	max. 57 Ω/km
Nominal voltage, cable	250 V (AC)
Test voltage	2000 V (50 Hz, 5 minutes)
Smallest bending radius, fixed installation	13.5 mm
Smallest bending radius, movable installation	53 mm
Dynamic load capacity (bending)	Max. bending cycles: 5000000, Bending radius: 44 mm, Traversing path: 10 m, Traversing rate: 3 m/s, Acceleration: 10 m/s²

Flame resistance	according to DIN VDE 0472 Part 804
Other resistance	UV resistant
Special properties	Silicone-free
	Irradiated
Ambient temperature (operation)	-50 °C ... 105 °C (cable, fixed installation)
	-40 °C ... 105 °C (Cable, flexible installation)

PUR halogen-free gray [280]

Dimensional drawing	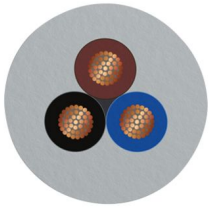
Cable weight	26 kg/km
UL AWM Style	20549
Number of positions	3
Shielded	no
Cable type	PUR halogen-free gray [280]
	PUR halogen-free gray 280
Conductor structure signal line	42x 0.10 mm
AWG signal line	22
Conductor cross-section	0.34 mm²
Wire diameter incl. insulation	1.27 mm ±0.02 mm
External cable diameter	4.40 mm ±0.15 mm
Outer sheath, material	PUR
External sheath, color	gray RAL 7001
Conductor material	Bare Cu litz wires
Material wire insulation	TPE
Single wire, color	brown, blue, black
Thickness, insulation	0.21 mm (Core insulation)
	approx. 0.80 mm (Outer cable sheath)
Overall twist	3 wires, twisted
Max. conductor resistance	max. 58 Ω/km (at 20 °C)
Insulation resistance	≥ 10 GΩ*km (at 20 °C)
Nominal voltage, cable	≤ 300 V
Test voltage	≥ 3000 V
Dynamic load capacity (bending)	Max. bending cycles: 10000000
Dynamic load capacity (torsion)	Torsion: ±180 °/m, Torsion cycles: ≥5000000, Torsional frequency: 35 cycles/min.
Halogen-free	in accordance with DIN VDE 0472 part 815
Ambient temperature (operation)	-25 °C ... 80 °C (cable, fixed installation)

PVC black [PVC]

Dimensional drawing	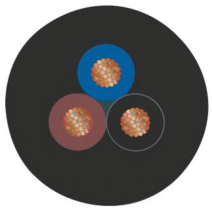
Cable weight	40 kg/km
UL AWM Style	2464 / 1729 (80°C/300 V)
Number of positions	3
Shielded	no
Cable type	PVC black [PVC]
	PVC black PVC
Conductor structure signal line	19x 0.15 mm
AWG signal line	22
Conductor cross-section	3x 0.34 mm² (Signal line)
Wire diameter incl. insulation	1.26 mm ±0.05 mm
External cable diameter	4.30 mm ±0.2 mm
Outer sheath, material	PVC
External sheath, color	black RAL 9005
Conductor material	Bare Cu litz wires
Material wire insulation	PVC
Single wire, color	brown, blue, black
Thickness, insulation	≥ 0.23 mm (Core insulation)
Thickness, outer sheath	≥ 0.76 mm
Overall twist	3 wires, twisted
Max. conductor resistance	max. 57 Ω/km (at 20 °C)
Insulation resistance	≥ 100 MΩ*km (at 20 °C)
Nominal voltage, cable	≤ 300 V
Test voltage	≥ 2500 V
Minimum bending radius, fixed installation	5 x D
Minimum bending radius, flexible installation	10 x D
Smallest bending radius, fixed installation	22 mm
Smallest bending radius, movable installation	43 mm
Flame resistance	As per UL-Style 2464
Ambient temperature (operation)	-25 °C ... 80 °C (cable, fixed installation)
	-10 °C ... 80 °C (Cable, flexible installation)

PVC gray [500]

Dimensional drawing	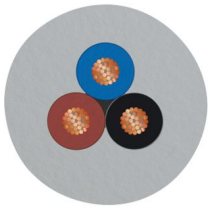
Cable weight	40 kg/km
UL AWM Style	2464 / 1729 (80°C/300 V)
Number of positions	3
Shielded	no
Cable type	PVC gray [500]
	PVC gray 500
Conductor structure signal line	19x 0.15 mm
AWG signal line	22
Conductor cross-section	3x 0.34 mm² (Signal line)
Wire diameter incl. insulation	1.26 mm ±0.05 mm
External cable diameter	4.30 mm ±0.2 mm
Outer sheath, material	PVC
External sheath, color	gray RAL 7001
Conductor material	Bare Cu litz wires
Material wire insulation	PVC
Single wire, color	brown, blue, black
Thickness, insulation	≥ 0.23 mm (Core insulation)
Thickness, outer sheath	≥ 0.76 mm
Overall twist	3 wires, twisted
Max. conductor resistance	max. 57 Ω/km (at 20 °C)
Insulation resistance	≥ 100 MΩ*km (at 20 °C)
Nominal voltage, cable	≤ 300 V
Test voltage	≥ 2500 V
Minimum bending radius, fixed installation	5 x D
Minimum bending radius, flexible installation	10 x D
Smallest bending radius, fixed installation	22 mm
Smallest bending radius, movable installation	43 mm
Flame resistance	As per UL-Style 2464
Ambient temperature (operation)	-40 °C ... 80 °C (cable, fixed installation)
	-25 °C ... 80 °C (Cable, flexible installation)

PVC yellow [540]

Dimensional drawing	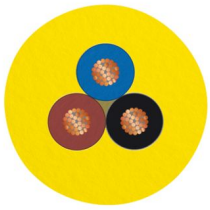
Cable weight	40 kg/km
Number of positions	3
Shielded	no
Cable type	PVC yellow [540]
	PVC yellow 540
Conductor structure signal line	42x 0.10 mm
AWG signal line	22
Conductor cross-section	0.34 mm²
Wire diameter incl. insulation	1.45 mm ±0.05 mm
External cable diameter	5.20 mm ±0.2 mm
Outer sheath, material	PVC
External sheath, color	yellow
Conductor material	Bare Cu litz wires
Material wire insulation	PVC
Single wire, color	brown, blue, black
Thickness, insulation	≥ 0.23 mm (Core insulation)
	≥ 0.76 mm (Outer cable sheath)
Overall twist	3 wires, twisted
Max. conductor resistance	max. 58 Ω/km (at 20 °C)
Insulation resistance	≥ 1 GΩ*km (at 20 °C)
Nominal voltage, cable	≤ 300 V
Test voltage	≥ 3000 V
Flame resistance	As per UL-Style 2464
Ambient temperature (operation)	-25 °C ... 80 °C (cable, fixed installation)
	-5 °C ... 80 °C (Cable, flexible installation)

PVC yellow 105 °C [542]

Dimensional drawing	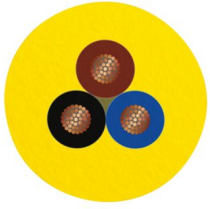
Cable weight	38 kg/km

Number of positions	3
Shielded	no
Cable type	PVC yellow 105 °C [542]
	PVC yellow 105 °C 542
Conductor structure signal line	42x 0.10 mm
AWG signal line	22
Conductor cross-section	0.34 mm²
Wire diameter incl. insulation	1.55 mm ±0.05 mm
External cable diameter	5.20 mm ±0.2 mm
Outer sheath, material	PVC
External sheath, color	yellow
Conductor material	Bare Cu litz wires
Material wire insulation	PVC
Single wire, color	brown, blue, black
Thickness, insulation	≥ 0.38 mm (Core insulation)
	≥ 0.76 mm (Outer cable sheath)
Overall twist	3 wires, twisted
Max. conductor resistance	max. 58 Ω/km (at 20 °C)
Insulation resistance	≥ 100 MΩ*km (at 20 °C)
Nominal voltage, cable	300 V
Test voltage	4000 V
Flame resistance	according to DIN 50265-2-1
Ambient temperature (operation)	-25 °C ... 105 °C (cable, fixed installation)
	-5 °C ... 105 °C (Cable, flexible installation)

Gray, highly flexible PUR [800]

Dimensional drawing	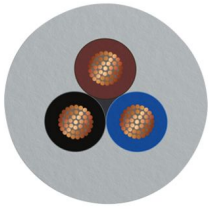
Note	Due to the extremely robust outer sheath, this cable should only be stripped in 5 cm increments.
Cable weight	28.3 kg/km
UL AWM Style	20549
Number of positions	3
Shielded	no
Cable type	Gray, highly flexible PUR [800]
	Gray, highly flexible PUR 800
Conductor structure signal line	42x 0.10 mm
AWG signal line	22

Conductor cross-section	3x 0.34 mm² (Signal line)
Wire diameter incl. insulation	1.3 mm ±0.05 mm (Signal line)
External cable diameter	4.50 mm ±0.2 mm
Outer sheath, material	PUR
External sheath, color	gray RAL 7001
Conductor material	Bare Cu litz wires
Material wire insulation	PP
Single wire, color	brown, blue, black
Overall twist	3 wires, twisted
Max. conductor resistance	approx. 53 Ω/km
Insulation resistance	≥ 20 MΩ*km
Nominal voltage, cable	300 V
Test voltage	2000 V
Minimum bending radius, fixed installation	4 x D
Minimum bending radius, flexible installation	7.5 x D
Smallest bending radius, fixed installation	18 mm
Smallest bending radius, movable installation	34 mm
Dynamic load capacity (bending)	Max. bending cycles: 10000000, Bending radius: 7,5 x D, Traversing path: 5 m, Traversing rate: 3.3 m/s, Acceleration: 5 m/s²
	Max. bending cycles: 15000000, Bending radius: 50 mm, Traversing path: 0.9 m, Traversing rate: 5 m/s, Acceleration: 30 m/s²
Dynamic load capacity (torsion)	Torsion: ±360 °/m, Torsion cycles: 1000000, Torsional frequency: 35 cycles/min.
Halogen-free	in accordance with DIN VDE 0472 part 815
Flame resistance	in accordance with UL 758/1581 FT2
Resistance to oil	in accordance with DIN EN 60811-2-1
Other resistance	Highly resistant to acids, alkaline solutions and solvents
	Silicone-free
Special properties	Cable jacket is welding spark-resistant, recyclable, matt, low-adhesion, abrasion-resistant, flame-retardant, and self-extinguishing
	Free from silicone and cadmium
	Free of substances which would hinder coating with paint or varnish
Ambient temperature (operation)	-40 °C ... 80 °C (cable, fixed installation)
	-25 °C ... 80 °C (Cable, flexible installation)

Environmental and real-life conditions

Ambient conditions

Degree of protection	IP65
	IP67
	IP68
Ambient temperature (operation) (male connector/female connector)	-25 °C ... 85 °C (Plug / socket)

Standards and regulations

M12

Standard designation	M12 connector
Standards/specifications	IEC 61076-2-101

Drawings

Dimensional drawing

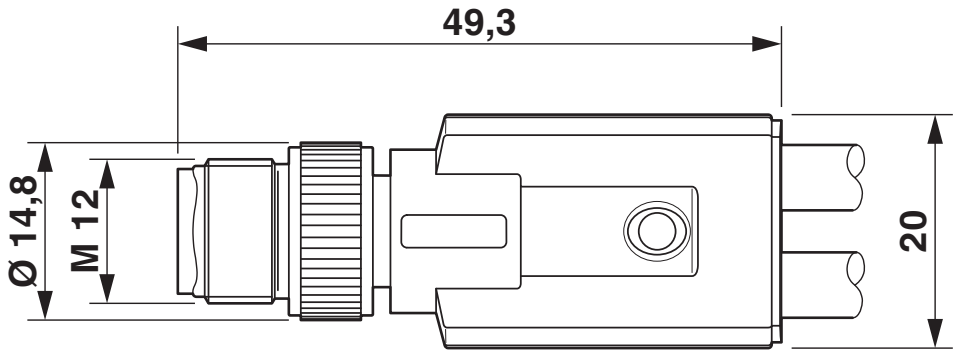

Plug M12 x 1, Y distributor

Dimensional drawing

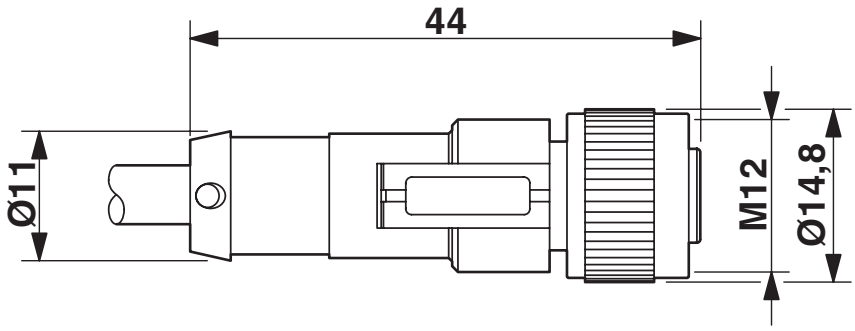

M12 x 1 socket, straight

Schematic diagram

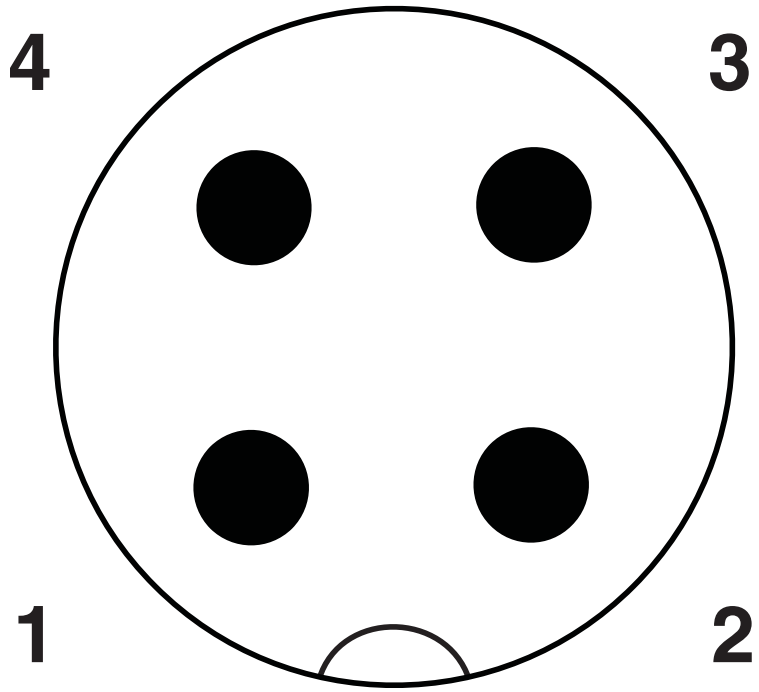

Pin assignment M12 Y plug, 4-pos., A-coded, view plug side

Schematic diagram

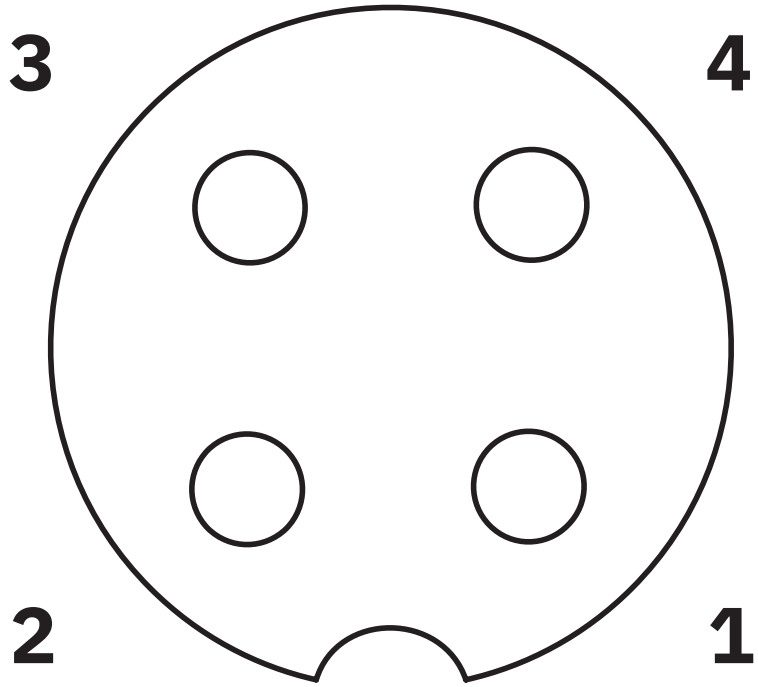

Pin assignment M12 socket, 4-pos., A-coded, view female side

Circuit diagram

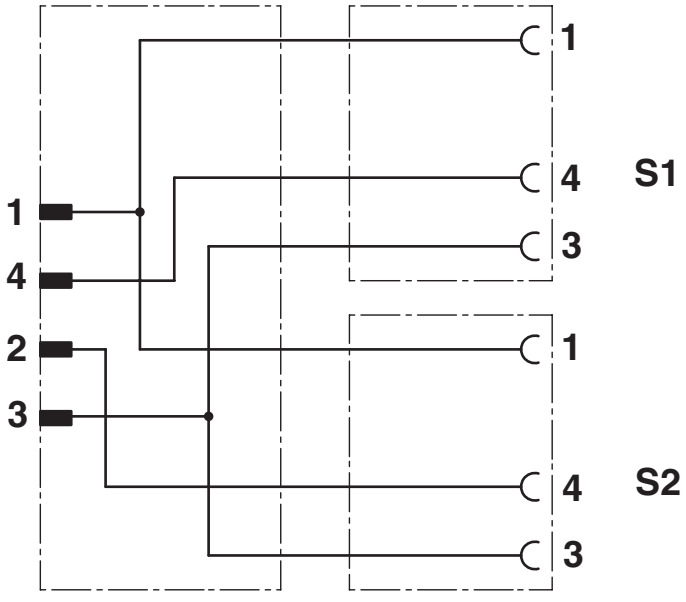

Contact assignment of the M12 plug and the M12 socket

Approvals

To download certificates, visit the product detail page: https://www.phoenixcontact.com/us/products/1699766

UL Listed
Approval ID: FILE E 221474

	Nominal voltage U_N	Nominal current I_N	Cross section AWG	Cross section mm^2
keine				
	300 V	4 A	-	-

cUL Listed
Approval ID: FILE E 221474

	Nominal voltage U_N	Nominal current I_N	Cross section AWG	Cross section mm^2
keine				
	300 V	4 A	-	-

EAC-RoHS
Approval ID: RU D-DE.HB35.B.00387

Classifications

ECLASS

ECLASS-13.0	27060313
ECLASS-15.0	27060313

ETIM

ETIM 10.0	EC001855

UNSPSC

UNSPSC 21.0	26121600

Environmental product compliance

EU RoHS

Fulfills EU RoHS substance requirements	Yes, No exemptions

China RoHS

Environment friendly use period (EFUP)	EFUP-E
	No hazardous substances above the limits

EU REACH SVHC

REACH candidate substance (CAS No.)	No substance above 0.1 wt%

EF3.1 Climate Change

CO2e kg	1.266 kg CO2e

Phoenix Contact 2026 © - all rights reserved
https://www.phoenixcontact.com

Phoenix Contact USA
586 Fulling Mill Road
Middletown, PA 17057, United States
(+717) 944-1300
info@phoenixcon.com