# SACC-M12FS-5CON-PG11-DUO - Connector

1694596

https://www.phoenixcontact.com/us/products/1694596

Please be informed that the data shown in this PDF document is generated from our online catalog. Please find the complete data in the user documentation. Our general terms of use for downloads are valid.



Connector, Universal, 5-position, Socket straight M12, coding: A, Screw connection, knurl material: Plastic, cable gland Pg11-DUO, external cable diameter 2.1 mm ... 3 mm / 4 mm ... 5.2 mm

## Your advantages

- Safe use in the field, thanks to a high degree of protection
- Screw connection: proven connection technology for a large selection of different conductors
- Save space: connect two sensors to one connector with a multiple grommet

## Commercial data

| | |
|---|---|
| Item number | 1694596 |
| Packing unit | 1 pc |
| Minimum order quantity | 1 pc |
| Sales key | BF30 |
| Product key | AF2CAA |
| GTIN | 4017918457099 |
| Weight per piece (including packing) | 22.1 g |
| Weight per piece (excluding packing) | 22 g |
| Customs tariff number | 85366990 |
| Country of origin | DE |

## Technical data

### Notes

| | |
|---|---|
| Assembly note | NOTE: Observe the permissible bending radii when routing cables, since the degree of protection may be at risk if the bending forces are too high. Reduce mechanical loads upstream of the connector, e.g., by using cable ties. |

### Mounting

| | |
|---|---|
| Assembly note | This connector includes one seal for small and one seal for large outer cable diameters. |

### Product properties

| | |
|---|---|
| Product type | Circular connector (cable-side) |
| Number of positions | 5 |
| No. of cable outlets | 2 |
| Shielded | no |
| Coding | A |
| Cable outlet | straight |
| Pg screw connection | Pg11 |

Insulation characteristics

| | |
|---|---|
| Overvoltage category | II |
| Degree of pollution | 3 |

### Dimensions

| | |
|---|---|
| Dimensional drawing | 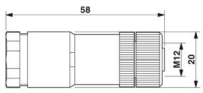 |
| Length | 58 mm |

External dimensions

| | |
|---|---|
| Outside diameter | 2x 2.1 mm ... 3 mm (when using the seal for small outer cable diameters) |
| | 2x 4 mm ... 5.2 mm (when using the seal for large outer cable diameters) |

Housing

| | |
|---|---|
| Diameter housing | 20 mm |

### Material specifications

| | |
|---|---|
| Seal material | NBR |
| Material of grip body | PA |
| Contact material | CuZn |

| | |
|---|---|
| Contact surface material | CuSnZn |
| Contact carrier material | PA |
| Material for screw connection | Plastic |

## Connection data

Conductor connection

| | |
|---|---|
| Connection method | Screw connection |
| Connection cross section | 0.25 mm² ... 0.75 mm² (without ferrule) |
| | 0.14 mm² ... 0.75 mm² (with ferrule) |
| | 0.25 mm² ... 0.75 mm² (solid) |
| Connection cross section AWG | 24 ... 18 (without ferrule) |
| | 26 ... 20 (with ferrule) |
| Stripping length of the individual wire | 5 mm |
| Tightening torque | 0.4 Nm (M12 knurl) |
| | 0.8 Nm ... 1 Nm |
| | 0.2 Nm (Screw terminal blocks) |

## Electrical properties

| | |
|---|---|
| Rated surge voltage | 1.5 kV |
| Insulation resistance | ≥ 100 MΩ |
| Nominal voltage $U_N$ | 48 V AC |
| | 60 V DC |
| Nominal current $I_N$ | 4 A |

## Mechanical properties

Mechanical data

| | |
|---|---|
| Insertion/withdrawal cycles | ≥ 50 |

## Connector

Connection 1

| | |
|---|---|
| Head design | Socket |
| Head cable outlet | straight |
| Head thread type | M12 |
| Coding | A |

## Interfaces

| | |
|---|---|
| Signal type/category | Universal |

## Environmental and real-life conditions

Ambient conditions

| | |
|---|---|
| Degree of protection | IP67 |
| Ambient temperature (operation) (male connector/female connector) | -40 °C ... 85 °C (Plug / socket) |

## Standards and regulations

M12

| | |
|---|---|
| Standard designation | M12 connector |
| Standards/specifications | IEC 61076-2-101 |

## Drawings

Dimensional drawing

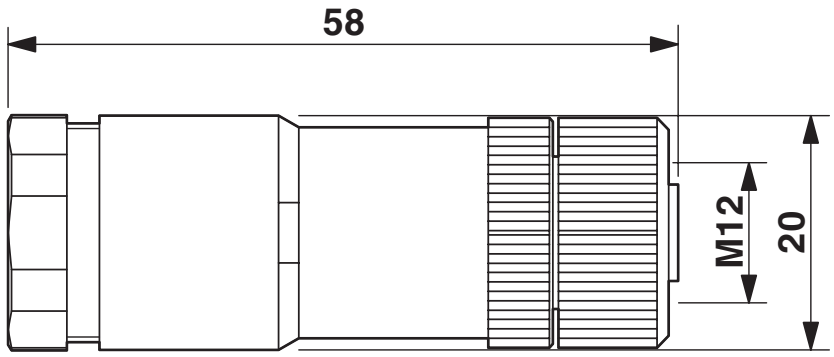


M12 x 1 socket, straight

Dimensional drawing

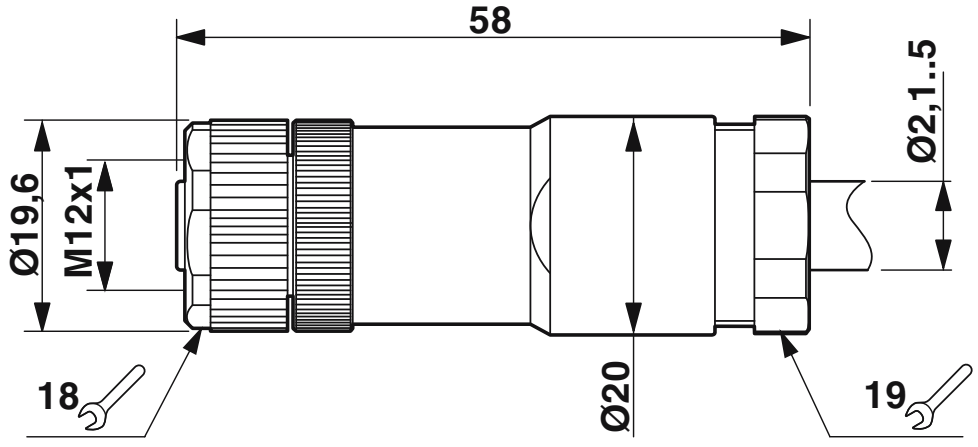


M12 x 1 socket, straight

Schematic diagram

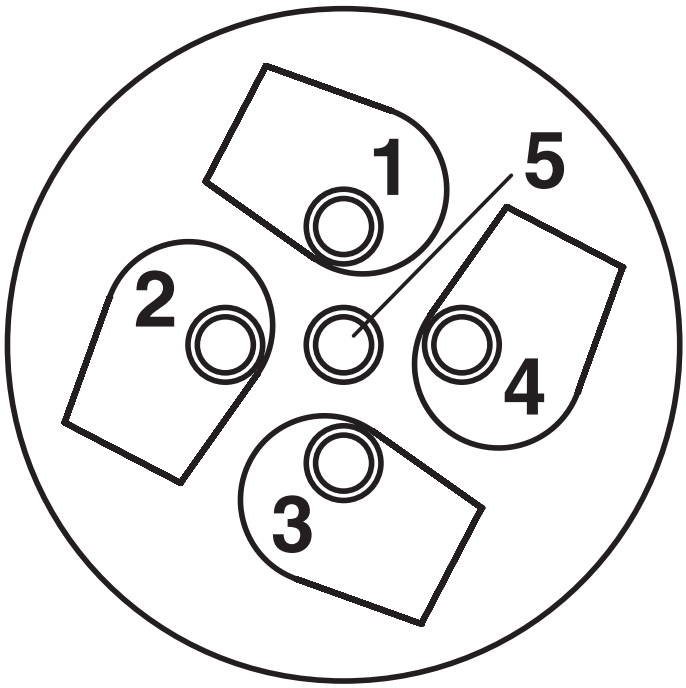


Cable connection side M12 (screw connection)

Schematic diagram

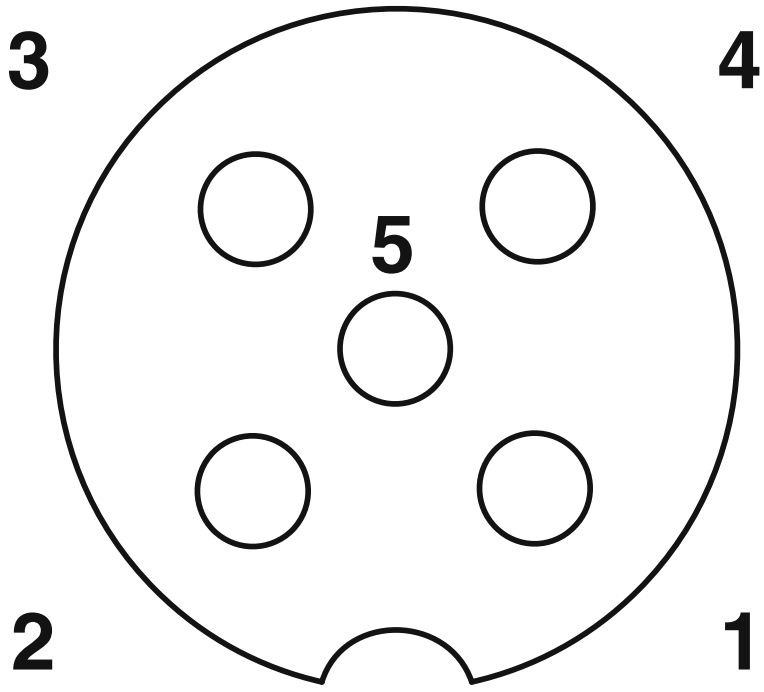


Pin assignment M12 socket, 5-pos., A-coded, socket side view

## Approvals

To download certificates, visit the product detail page: https://www.phoenixcontact.com/us/products/1694596

**cUL Recognized**
Approval ID: FILE E 221474

| | Nominal voltage $U_N$ | Nominal current $I_N$ | Cross section AWG | Cross section $mm^2$ |
|---|---|---|---|---|
| keine | | | | |
| | 60 V | 4 A | - | - |

**UL Recognized**
Approval ID: FILE E 221474

| | Nominal voltage $U_N$ | Nominal current $I_N$ | Cross section AWG | Cross section $mm^2$ |
|---|---|---|---|---|
| keine | | | | |
| | 60 V | 4 A | - | - |

## Classifications

### ECLASS

| | |
|---|---|
| ECLASS-13.0 | 27440116 |
| ECLASS-15.0 | 27440116 |

### ETIM

| | |
|---|---|
| ETIM 10.0 | EC002635 |

### UNSPSC

| | |
|---|---|
| UNSPSC 21.0 | 39121400 |

## Environmental product compliance

EU RoHS

| | |
|---|---|
| Fulfills EU RoHS substance requirements | Yes |
| Exemption | 6(c) |

China RoHS

| | |
|---|---|
| Environment friendly use period (EFUP) | EFUP-50 |
| | An article-related China RoHS declaration table can be found in the download area for the respective article under "Manufacturer declaration". For all articles with EFUP-E, no China RoHS declaration table issued and required. |

EU REACH SVHC

| | |
|---|---|
| REACH candidate substance (CAS No.) | Lead(CAS: 7439-92-1) |
| SCIP | 6620722d-6e83-4b20-801c-c4ed6bd17206 |

EF3.1 Climate Change

| | |
|---|---|
| CO2e kg | 0.77 kg CO2e |


Phoenix Contact 2026 © - all rights reserved
https://www.phoenixcontact.com



Phoenix Contact USA
586 Fulling Mill Road
Middletown, PA 17057, United States
(+717) 944-1300
info@phoenixcon.com