CK9,5-ED-50,00F AG - Crimp contact

1682081

https://www.phoenixcontact.com/us/products/1682081

Please be informed that the data shown in this PDF document is generated from our online catalog. Please find the complete data in the user documentation. Our general terms of use for downloads are valid.



Crimp contact, series: HC-M-...-70, Socket, turned, contact diameter: 9.5 mm, rated current: 200 A, connection cross section: 50 mm^2 ... 50 mm^2, AWG 1...1 , contact material: Cu alloy

Commercial data

Item number	1682081
Packing unit	1 pc
Minimum order quantity	1 pc
Sales key	BF65
Product key	AF7AIH
GTIN	4067923236868
Weight per piece (including packing)	40.1 g
Weight per piece (excluding packing)	40 g
Customs tariff number	85366990
Country of origin	DE

Technical data

Notes

Notes on the product family	HC-M-...-70 contact carrier
Note on application	The quality of a crimp connection is determined by DIN EN 60352-2.
Assembly note	The contacts are qualified for crimping dies in accordance with DIN 46235. Klauke, for example, offers an appropriate tool: Crimping dies from the D22 series are required for the EKM6022 battery-powered hydraulic crimping pliers. Due to the narrow crimping width of 5 mm, it is very important to make two compressions next to one another. For the EK12042 model, crimping dies from the HD13 series are required. Due to a wider crimping process, only one compression is required.
Note on application	Note on crimp connection technology: For flexible wires only. The specified conductor cross-sections refer to the nominal cross-section of the cable used. The wiring space of the crimp connection technology is designed for fine-stranded cables in accordance with VDE 0295 Class 5. Deviating cable structures (e.g., Class 1.2 and 6 or AWG cables) should be checked before use.

Product properties

Product type	Crimp contact
Series	HC-M-...-70
Contact material type	turned

Connection data

Connection technology

Contact connection type	Socket
Connection method	Crimp connection

Conductor connection

Stripping length	22.5 mm
Connection cross section	50 mm² ... 50 mm²
Connection cross section AWG	1 ... 1

Material specifications

Material Contact	Cu alloy (lead-free)
Material Contact surface	Ag

Dimensions

Dimensional drawing	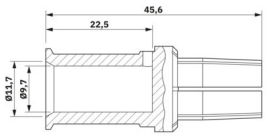
Length [l]	45.6 mm
Diameter (Contact diameter)	9.5 mm

Electrical properties

Rated current	200 A (Take into account the derating of the contact insert used. The rated current corresponds to the maximum possible connection cross-section.)

Mechanical properties

Mechanical data

Insertion/withdrawal cycles	≥ 500

Environmental and real-life conditions

Ambient conditions

Ambient temperature (operation)	-40 °C ... 125 °C

Drawings

Dimensional drawing

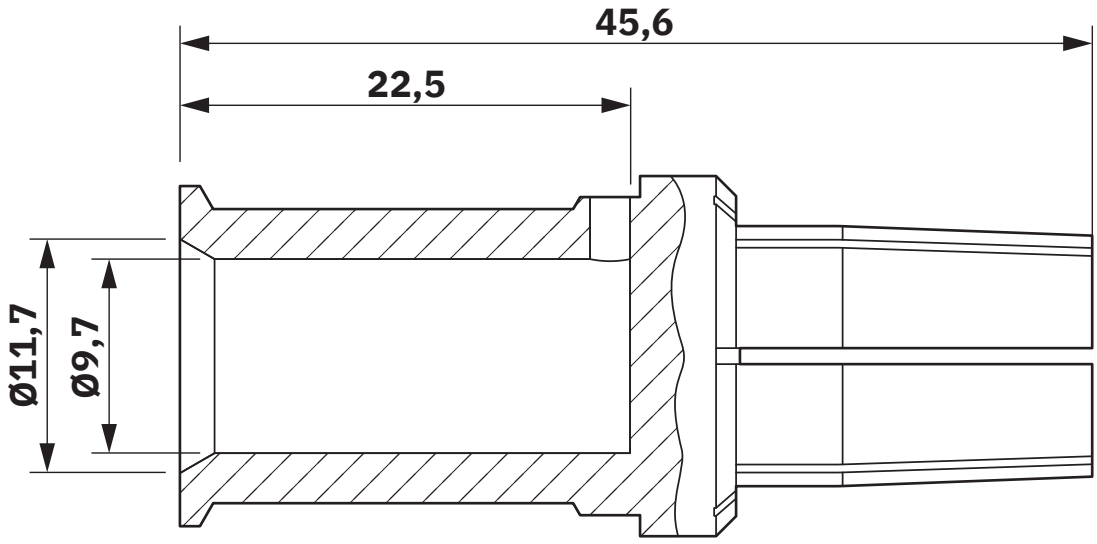

Dimensional drawing

Classifications

ECLASS

ECLASS-13.0	27440204
ECLASS-15.0	27440204

ETIM

ETIM 10.0	EC000796

UNSPSC

UNSPSC 21.0	39121500

Environmental product compliance

EU RoHS

Fulfills EU RoHS substance requirements	Yes, No exemptions

China RoHS

Environment friendly use period (EFUP)	EFUP-E
	No hazardous substances above the limits

EU REACH SVHC

REACH candidate substance (CAS No.)	No substance above 0.1 wt%

Phoenix Contact 2026 © - all rights reserved
https://www.phoenixcontact.com

Phoenix Contact USA
586 Fulling Mill Road
Middletown, PA 17057, United States
(+717) 944-1300
info@phoenixcon.com