SACC-M 8FS-3CON-M - Connector

1681172

https://www.phoenixcontact.com/us/products/1681172

Please be informed that the data shown in this PDF document is generated from our online catalog. Please find the complete data in the user documentation. Our general terms of use for downloads are valid.



Connector, Universal, 3-position, Socket straight M8, coding: A, Solder connection, knurl material: Brass, nickel-plated, external cable diameter 3.5 mm ... 5 mm

Your advantages

- Safe use in the field, thanks to a high degree of protection

Commercial data

Item number	1681172
Packing unit	1 pc
Minimum order quantity	1 pc
Sales key	BF35
Product key	AF2BIA
GTIN	4017918157524
Weight per piece (including packing)	9 g
Weight per piece (excluding packing)	6.92 g
Customs tariff number	85366990
Country of origin	DE

Technical data

Notes

Assembly note	NOTE: Observe the permissible bending radii when routing cables, since the degree of protection may be at risk if the bending forces are too high. Reduce mechanical loads upstream of the connector, e.g., by using cable ties.

Product properties

Product type	Circular connector (cable-side)
Number of positions	3
No. of cable outlets	1
Shielded	no
Coding	A
Cable outlet	straight

Insulation characteristics

Overvoltage category	II
Degree of pollution	3

Dimensions

Dimensional drawing	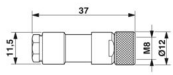
Length	37 mm

External dimensions

Outside diameter	3.5 mm ... 5 mm

Housing

Diameter housing	12 mm

Material specifications

Flammability rating according to UL 94	HB
Seal material	NBR
Material of grip body	PBT
Contact material	CuZn
Contact surface material	Au
Contact carrier material	PA
Material for screw connection	Brass, nickel-plated

Connection data

Conductor connection

Connection method	Solder connection
Connection cross section	0.08 mm² ... 0.25 mm² (flexible)
	0.08 mm² ... 0.25 mm² (solid)
Connection cross section AWG	28 ... 24 (flexible)
	28 ... 24 (solid)
Stripping length of the individual wire	3 mm
Tightening torque	0.2 Nm (M8 knurl)

Electrical properties

Rated surge voltage	0.8 kV
Insulation resistance	≥ 100 MΩ
Nominal voltage U_N	48 V AC
	60 V DC
Nominal current I_N	4 A

Mechanical properties

Mechanical data

Insertion/withdrawal cycles	≥ 100

Connector

Connection 1

Head design	Socket
Head cable outlet	straight
Head thread type	M8
Coding	A

Interfaces

Signal type/category	Universal

Environmental and real-life conditions

Ambient conditions

Degree of protection	IP67
Ambient temperature (operation) (male connector/female connector)	-40 °C ... 85 °C

Standards and regulations

Standard designation	M8 connector
Standards/specifications	IEC 61076-2-104

Drawings

Dimensional drawing

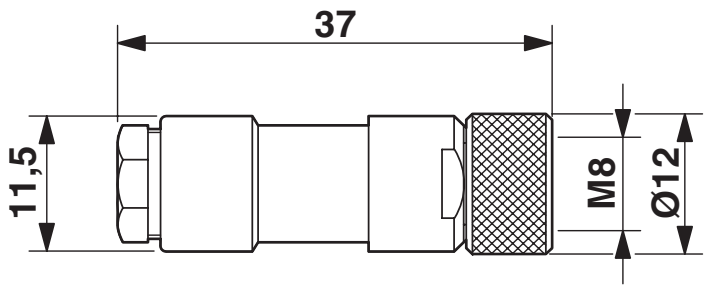

Socket M8 x 1, straight

Schematic diagram

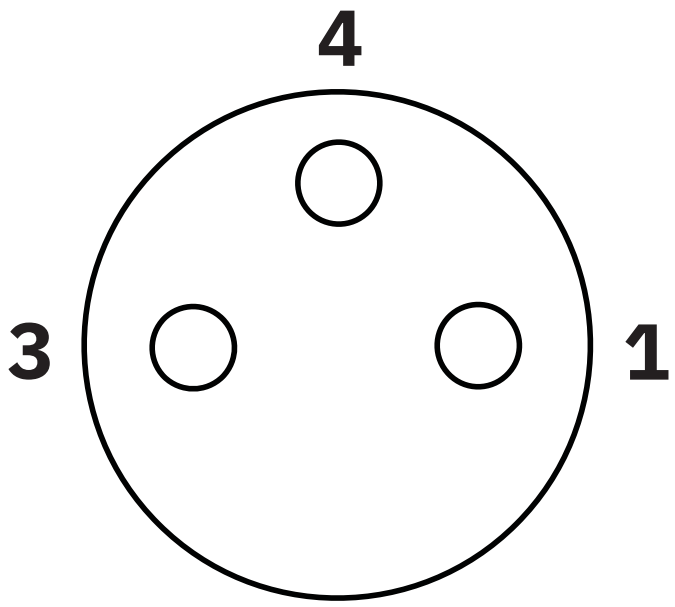

Pin assignment M8 socket, 3-pos.

Schematic diagram

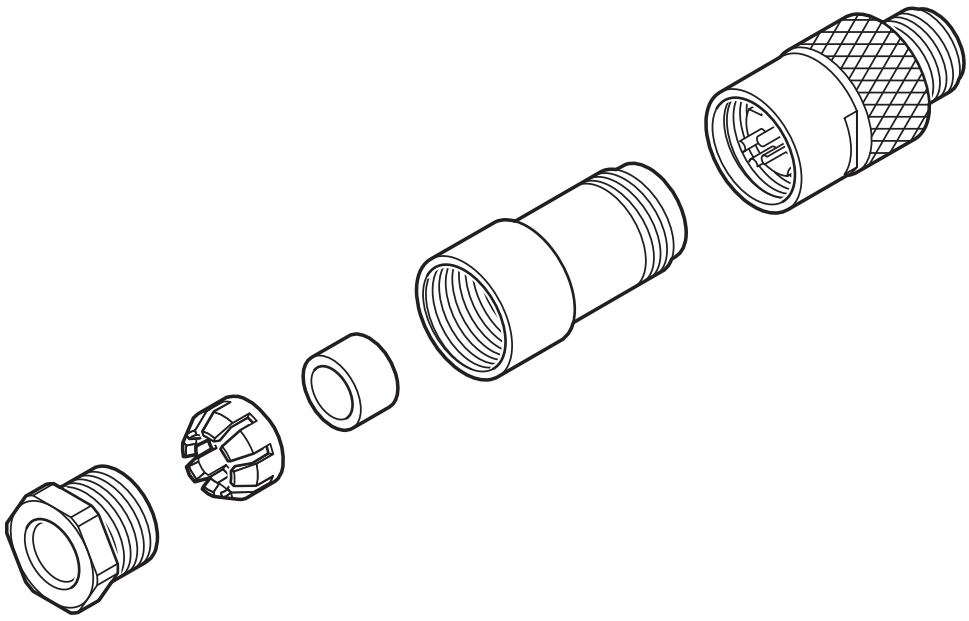

1 = pressure screw
2 = clamp-type cage
3 = gasket
4 = housing
5 = male or female insert

Approvals

To download certificates, visit the product detail page: https://www.phoenixcontact.com/us/products/1681172

UL Listed
Approval ID: FILE E 221474

	Nominal voltage U_N	Nominal current I_N	Cross section AWG	Cross section mm^2
keine				
	60 V	4 A	-	-

cUL Listed
Approval ID: FILE E 221474

	Nominal voltage U_N	Nominal current I_N	Cross section AWG	Cross section mm^2
keine				
	60 V	4 A	-	-

Classifications

ECLASS

ECLASS-13.0	27440116
ECLASS-15.0	27440116

ETIM

ETIM 10.0	EC002635

UNSPSC

UNSPSC 21.0	39121400

Environmental product compliance

EU RoHS

Fulfills EU RoHS substance requirements	Yes
Exemption	6(c)

China RoHS

Environment friendly use period (EFUP)	EFUP-50
	An article-related China RoHS declaration table can be found in the download area for the respective article under "Manufacturer declaration". For all articles with EFUP-E, no China RoHS declaration table issued and required.

EU REACH SVHC

REACH candidate substance (CAS No.)	Lead(CAS: 7439-92-1)
SCIP	ccf4cf92-9235-46fb-bae6-9421893552c0

EF3.1 Climate Change

CO2e kg	0.637 kg CO2e

Phoenix Contact 2026 © - all rights reserved
https://www.phoenixcontact.com

Phoenix Contact USA
586 Fulling Mill Road
Middletown, PA 17057, United States
(+717) 944-1300
info@phoenixcon.com