# SACC-M 8MS-3CON-M - Connector

1681156

https://www.phoenixcontact.com/us/products/1681156

Please be informed that the data shown in this PDF document is generated from our online catalog. Please find the complete data in the user documentation. Our general terms of use for downloads are valid.



Connector, Universal, 3-position, Plug straight M8, coding: A, Solder connection, knurl material: Brass, nickel-plated, external cable diameter 3.5 mm ... 5 mm

## Your advantages

- Safe use in the field, thanks to a high degree of protection

## Commercial data

| | |
|---|---|
| Item number | 1681156 |
| Packing unit | 1 pc |
| Minimum order quantity | 1 pc |
| Sales key | BF35 |
| Product key | AF2BIA |
| GTIN | 4017918157500 |
| Weight per piece (including packing) | 10.4 g |
| Weight per piece (excluding packing) | 8.65 g |
| Customs tariff number | 85366990 |
| Country of origin | DE |

## Technical data

### Notes

| | |
|---|---|
| Assembly note | NOTE: Observe the permissible bending radii when routing cables, since the degree of protection may be at risk if the bending forces are too high. Reduce mechanical loads upstream of the connector, e.g., by using cable ties. |

### Product properties

| | |
|---|---|
| Product type | Circular connector (cable-side) |
| Number of positions | 3 |
| No. of cable outlets | 1 |
| Shielded | no |
| Coding | A |
| Cable outlet | straight |

Insulation characteristics

| | |
|---|---|
| Overvoltage category | II |
| Degree of pollution | 3 |

### Dimensions

| | |
|---|---|
| Dimensional drawing | 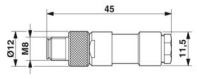 |
| Length | 45 mm |

External dimensions

| | |
|---|---|
| Outside diameter | 3.5 mm ... 5 mm |

Housing

| | |
|---|---|
| Diameter housing | 12 mm |

### Material specifications

| | |
|---|---|
| Flammability rating according to UL 94 | HB |
| Seal material | NBR |
| Material of grip body | PBT |
| Contact material | CuZn |
| Contact surface material | Au |
| Contact carrier material | PA |
| Material for screw connection | Brass, nickel-plated |

### Connection data

Conductor connection

| | |
|---|---|
| Connection method | Solder connection |
| Connection cross section | 0.08 mm² ... 0.25 mm² (flexible) |
| | 0.08 mm² ... 0.25 mm² (solid) |
| Connection cross section AWG | 28 ... 24 (flexible) |
| | 28 ... 24 (solid) |
| Stripping length of the individual wire | 3 mm |
| Tightening torque | 0.2 Nm (M8 knurl) |

## Electrical properties

| | |
|---|---|
| Rated surge voltage | 0.8 kV |
| Insulation resistance | ≥ 100 MΩ |
| Nominal voltage $U_N$ | 48 V AC |
| | 60 V DC |
| Nominal current $I_N$ | 4 A |

## Mechanical properties

Mechanical data

| | |
|---|---|
| Insertion/withdrawal cycles | ≥ 100 |

## Connector

Connection 1

| | |
|---|---|
| Head design | Plug |
| Head cable outlet | straight |
| Head thread type | M8 |
| Coding | A |

## Interfaces

| | |
|---|---|
| Signal type/category | Universal |

## Environmental and real-life conditions

Ambient conditions

| | |
|---|---|
| Degree of protection | IP67 |
| Ambient temperature (operation) (male connector/female connector) | -40 °C ... 85 °C |

## Standards and regulations

| | |
|---|---|
| Standard designation | M8 connector |
| Standards/specifications | IEC 61076-2-104 |

## Drawings

Dimensional drawing

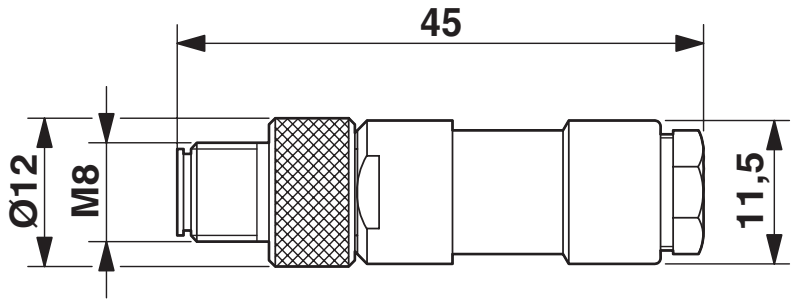


M8 x 1 male plug, straight version

Schematic diagram

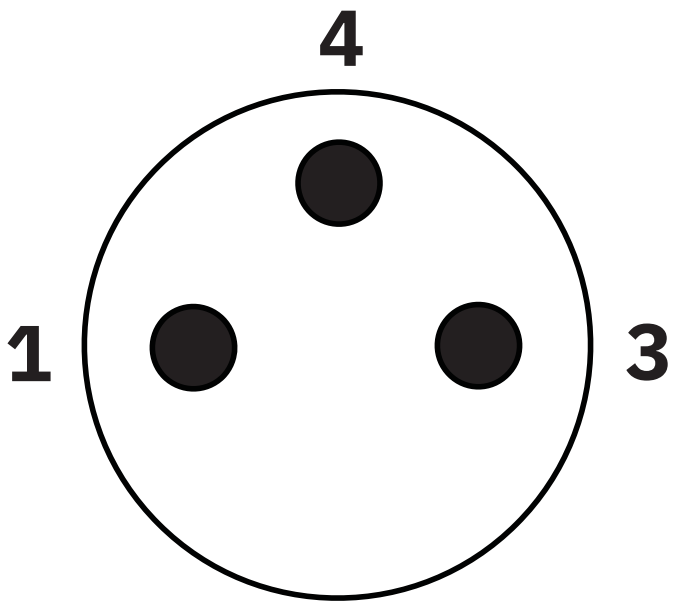


Pin assignment M8 male connector, 3-pos.

Schematic diagram

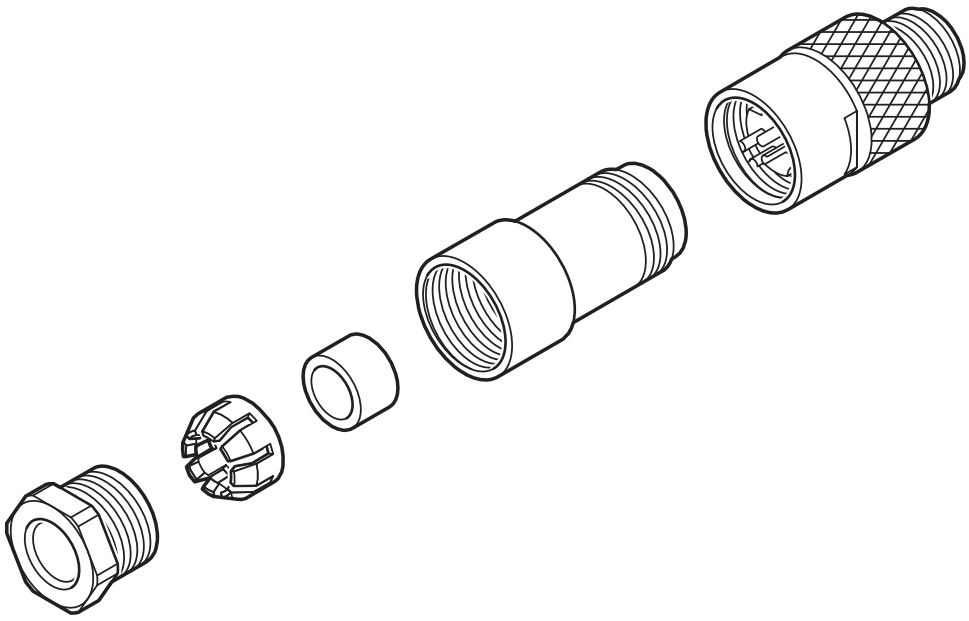

1 = pressure screw
2 = clamp-type cage
3 = gasket
4 = housing
5 = male or female insert

## Approvals

To download certificates, visit the product detail page: https://www.phoenixcontact.com/us/products/1681156

**UL Listed**
Approval ID: FILE E 221474

| | Nominal voltage $U_N$ | Nominal current $I_N$ | Cross section AWG | Cross section $mm^2$ |
|---|---|---|---|---|
| keine | | | | |
| | 60 V | 4 A | - | - |

**cUL Listed**
Approval ID: FILE E 221474

| | Nominal voltage $U_N$ | Nominal current $I_N$ | Cross section AWG | Cross section $mm^2$ |
|---|---|---|---|---|
| keine | | | | |
| | 60 V | 4 A | - | - |

## Classifications

### ECLASS

| | |
|---|---|
| ECLASS-13.0 | 27440116 |
| ECLASS-15.0 | 27440116 |

### ETIM

| | |
|---|---|
| ETIM 10.0 | EC002635 |

### UNSPSC

| | |
|---|---|
| UNSPSC 21.0 | 39121400 |

## Environmental product compliance

EU RoHS

| | |
|---|---|
| Fulfills EU RoHS substance requirements | Yes |
| Exemption | 6(c) |

China RoHS

| | |
|---|---|
| Environment friendly use period (EFUP) | EFUP-50 |
| | An article-related China RoHS declaration table can be found in the download area for the respective article under "Manufacturer declaration". For all articles with EFUP-E, no China RoHS declaration table issued and required. |

EU REACH SVHC

| | |
|---|---|
| REACH candidate substance (CAS No.) | Lead(CAS: 7439-92-1) |
| SCIP | b55d0826-077d-4ab0-9e1c-b5cb67926eae |

EF3.1 Climate Change

| | |
|---|---|
| CO2e kg | 0.681 kg CO2e |


Phoenix Contact 2026 © - all rights reserved
https://www.phoenixcontact.com



Phoenix Contact USA
586 Fulling Mill Road
Middletown, PA 17057, United States
(+717) 944-1300
info@phoenixcon.com