HC-B 16-SD-MQ/FS - Protective cover

1678321

https://www.phoenixcontact.com/us/products/1678321

Please be informed that the data shown in this PDF document is generated from our online catalog. Please find the complete data in the user documentation. Our general terms of use for downloads are valid.



Protective cover B16, with double locking latch, protective cover material: PA, height: 21.6 mm, seal: yes, with lanyard

Commercial data

Item number	1678321
Packing unit	1 pc
Sales key	BF66
Product key	AF7AZC
GTIN	4017918151867
Weight per piece (including packing)	75.9 g
Weight per piece (excluding packing)	75.9 g
Customs tariff number	85389099
Country of origin	DE

Technical data

Product properties

Product type	Protective cover
Housing type	Protective cover
Type	B16
Retaining cord present	yes
Seal present	yes

Dimensions

Dimensional drawing	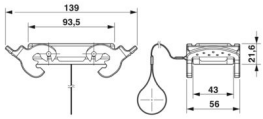
Width	43 mm
Height	21.6 mm
Length	93.5 mm
Diameter Retaining cord eyelet	30 mm

Material specifications

Material Protective cover	PA
Flammability rating according to UL 94	HB
Seal material	NBR
Material, protective cover	PA
Locking latch material	High-grade steel, handle: PA-GF

Mechanical properties

Mechanical data

Locking type	Latch

Environmental and real-life conditions

Ambient conditions

Degree of protection	IP66
Ambient temperature (operation)	-20 °C ... 100 °C

Mounting

Assembly note	Plastic protective cover for short-term protection

Drawings

Dimensional drawing

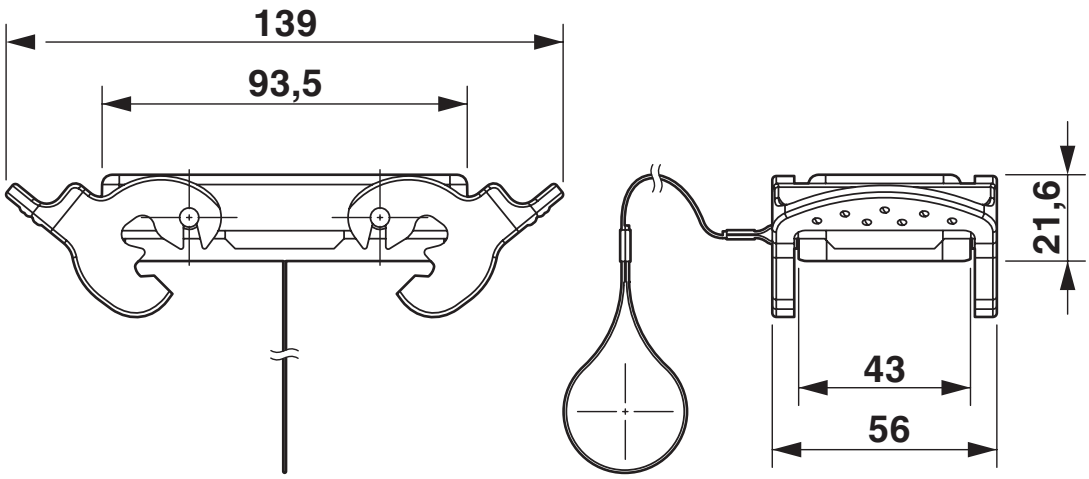

Dimensional drawing

Classifications

ECLASS

ECLASS-13.0	27440208
ECLASS-15.0	27440208

UNSPSC

UNSPSC 21.0	39121400

Environmental product compliance

EU RoHS

Fulfills EU RoHS substance requirements	Yes, No exemptions

China RoHS

Environment friendly use period (EFUP)	EFUP-E
	No hazardous substances above the limits

EU REACH SVHC

REACH candidate substance (CAS No.)	No substance above 0.1 wt%

Phoenix Contact 2026 © - all rights reserved
https://www.phoenixcontact.com

Phoenix Contact USA
586 Fulling Mill Road
Middletown, PA 17057, United States
(+717) 944-1300
info@phoenixcon.com