HC-BS-PG21 - Screw plug

1674529

https://www.phoenixcontact.com/us/products/1674529

Please be informed that the data shown in this PDF document is generated from our online catalog. Please find the complete data in the user documentation. Our general terms of use for downloads are valid.



Screw plug, material for screw connection: Brass, nickel-plated, connecting thread: Pg21, color: silver-colored

Commercial data

Item number	1674529
Packing unit	10 pc
Minimum order quantity	1 pc
Sales key	BF68
Product key	AF7DZX
GTIN	4017918135423
Weight per piece (including packing)	23.62 g
Weight per piece (excluding packing)	21.94 g
Customs tariff number	74198090
Country of origin	DE

Technical data

Product properties

Product type	Plug for cable screw gland
Pg screw connection	Pg21

Dimensions

Dimensional drawing	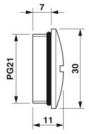
Length	11 mm
Length of the connecting thread	7 mm
Diameter	30 mm
Diameter	30 mm
Hexagon angular dimension	Diameter (no corners)
Thread type connection side	Pg21

Material specifications

Material	Brass, nickel-plated
Seal material	NBR (O-ring)
Housing surface material	Ni
Material for screw connection	Brass, nickel-plated

Cable/line

Halogen-free	no

Environmental and real-life conditions

Ambient conditions

Degree of protection	IP68
Ambient temperature (operation)	-20 °C ... 80 °C

Drawings

Dimensional drawing

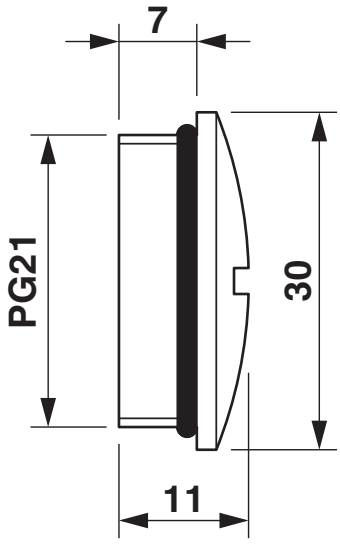

Filler plugs Pg21

Approvals

To download certificates, visit the product detail page: https://www.phoenixcontact.com/us/products/1674529

EAC
Approval ID: RU C-DE.AI30.B.01102

Classifications

ECLASS

ECLASS-13.0	23111190
ECLASS-15.0	27140805

ETIM

ETIM 10.0	EC000032

UNSPSC

UNSPSC 21.0	31261500

Environmental product compliance

EU RoHS

Fulfills EU RoHS substance requirements	Yes
Exemption	6(c)

China RoHS

Environment friendly use period (EFUP)	EFUP-50
	An article-related China RoHS declaration table can be found in the download area for the respective article under "Manufacturer declaration". For all articles with EFUP-E, no China RoHS declaration table issued and required.

EU REACH SVHC

REACH candidate substance (CAS No.)	Lead(CAS: 7439-92-1)
SCIP	5cf1a2c2-711a-4148-8522-a1136b972b98

EF3.1 Climate Change

CO2e kg	0.279 kg CO2e

Phoenix Contact 2026 © - all rights reserved
https://www.phoenixcontact.com

Phoenix Contact USA
586 Fulling Mill Road
Middletown, PA 17057, United States
(+717) 944-1300
info@phoenixcon.com