SAC-3P-M12Y/2X1,5-PUR/M 8FR - Sensor/actuator cable

1671399

https://www.phoenixcontact.com/us/products/1671399

Please be informed that the data shown in this PDF document is generated from our online catalog. Please find the complete data in the user documentation. Our general terms of use for downloads are valid.



Sensor/actuator cable, 3-position, PUR halogen-free, black-gray RAL 7021, Plug straight M12, coding: A, on Socket angled M8, coding: A and Socket angled M8, coding: A, cable length: 1.5 m

Commercial data

Item number	1671399
Packing unit	1 pc
Minimum order quantity	1 pc
Sales key	BF03
Product key	AF1COA
GTIN	4017918135225
Weight per piece (including packing)	75.5 g
Weight per piece (excluding packing)	76 g
Customs tariff number	85444290
Country of origin	PL

Technical data

Product properties

Product type	Distributor with cable
Application	Standard
Number of positions	3
No. of cable outlets	2
Shielded	no
Coding	A

Insulation characteristics

Overvoltage category	II
Degree of pollution	3

Connection data

Tightening torque	0.4 Nm (M12 connector)
	0.2 Nm (M8 connectors)

Material specifications

Flammability rating according to UL 94	HB
Seal material	NBR
Material of grip body	TPU, hardly inflammable, self-extinguishing
Contact material	CuSn
Contact surface material	Ni/Au
Contact carrier material	TPU GF
Material for screw connection	Zinc die-cast, nickel-plated

Electrical properties

Insulation resistance	≥ 100 MΩ
Nominal voltage U_N	48 V AC
	60 V DC
Nominal current I_N	4 A

Mechanical properties

Mechanical data

Insertion/withdrawal cycles	≥ 100

Signaling

Status display	no
Status display present	no

Connector

Connection 1

Type	Plug straight M12
Coding type	A

Connection 2

Type	Socket angled M8
Coding type	A

Connection 3

Type	Socket angled M8
Coding type	A

Cable/line

Cable length	1.5 m

PUR halogen-free black [PUR]

Dimensional drawing	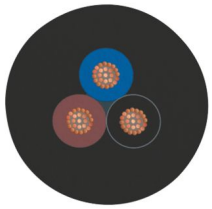
Cable weight	18 kg/km
UL AWM Style	20549 / 10493 (80°C/300 V)
Number of positions	3
Shielded	no
Cable type	PUR halogen-free black [PUR]
Conductor structure signal line	32x 0.10 mm
AWG signal line	24
Conductor cross-section	3x 0.25 mm² (Signal line)
Wire diameter incl. insulation	1.17 mm ±0.02 mm
External cable diameter	3.60 mm ±0.15 mm
Outer sheath, material	PUR
External sheath, color	black-gray RAL 7021
Conductor material	Bare Cu litz wires
Material wire insulation	PP
Single wire, color	brown, blue, black
Thickness, insulation	≥ 0.21 mm (Core insulation)
Thickness, outer sheath	approx. 0.50 mm
Overall twist	3 wires, twisted
Length of twist, overall twist	40 mm
Max. conductor resistance	≤ 78 Ω/km (at 20 °C)
Insulation resistance	≥ 100 GΩ*km (at 20 °C)
Nominal voltage, cable	≤ 300 V

Test voltage	≥ 3000 V
Smallest bending radius, fixed installation	18 mm
Smallest bending radius, movable installation	36 mm
Dynamic load capacity (bending)	Max. bending cycles: 10000000, Bending radius: 44 mm, Traversing path: 10 m, Traversing rate: 3 m/s, Acceleration: 10 m/s²
Dynamic load capacity (torsion)	Torsion: ±180 °/m, Torsion cycles: ≥5000000, Torsional frequency: 35 cycles/min.
Halogen-free	in accordance with DIN VDE 0472 part 815
Flame resistance	in accordance with UL 758/1581 FT2
	DIN EN 60332-2-2 (20 s)
Resistance to oil	in accordance with DIN EN 60811-2-1
Other resistance	hydrolysis and microbe resistant
	Highly resistant to acids, alkaline solutions and solvents
	Resistant to salt water
	partly UV-resistant (in accordance with DIN EN ISO 4892-2-A)
Special properties	Flexible cable conduit capable
	Silicone-free
	Free of substances which would hinder coating with paint or varnish
Ambient temperature (operation)	-40 °C ... 80 °C (cable, fixed installation)
	-25 °C ... 80 °C (Cable, flexible installation)

Environmental and real-life conditions

Ambient conditions

Degree of protection	IP65
	IP67
	IP68
Ambient temperature (operation) (male connector/female connector)	-25 °C ... 90 °C (Plug / socket)
Ambient temperature (operation) (Cable, fixed installation)	-40 °C ... 80 °C (cable, fixed installation)
Ambient temperature (operation) (Cable, flexible installation)	-5 °C ... 80 °C (Cable, flexible installation)

Standards and regulations

Standard designation	M12 connector
Standards/specifications	IEC 61076-2-101
Standard designation	M8 connector
Standards/specifications	IEC 61076-2-104

Drawings

Dimensional drawing

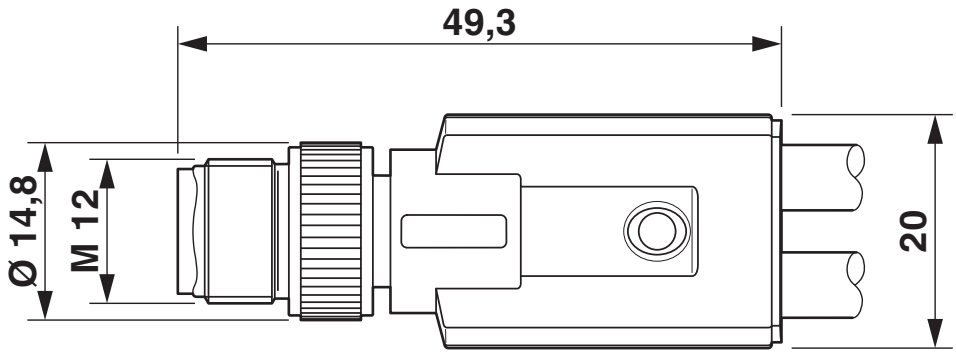

Plug M12 x 1, Y distributor

Dimensional drawing

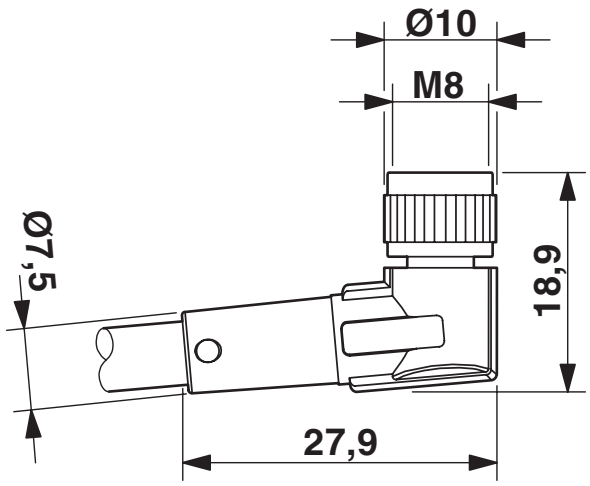

Socket M8 x 1, angled

Schematic diagram

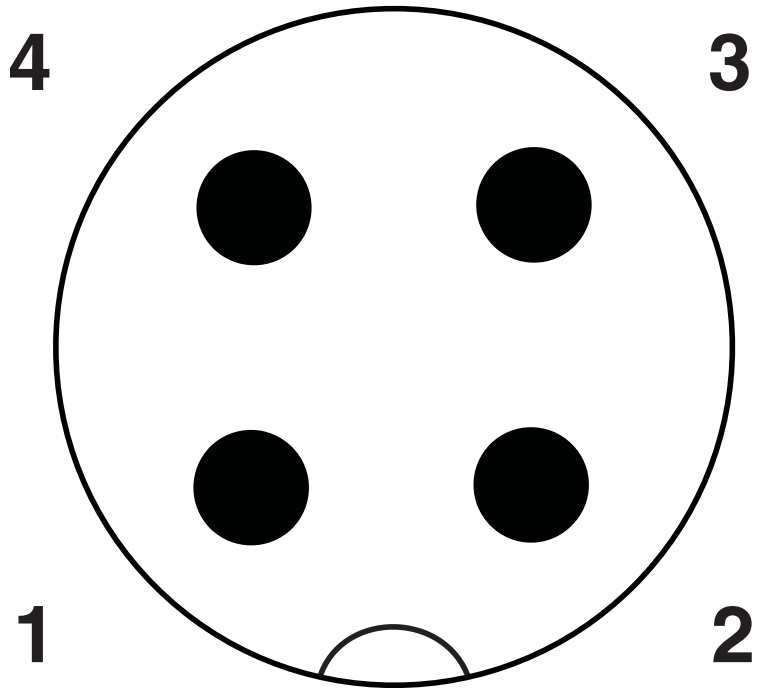

Pin assignment M12 Y plug, 4-pos., A-coded, view plug side

Schematic diagram

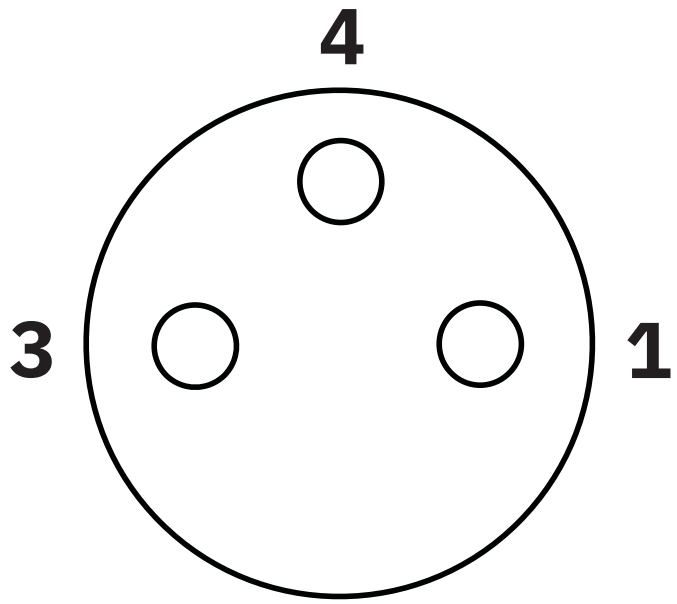

Pin assignment M8 socket, 3-pos., view female side

Circuit diagram

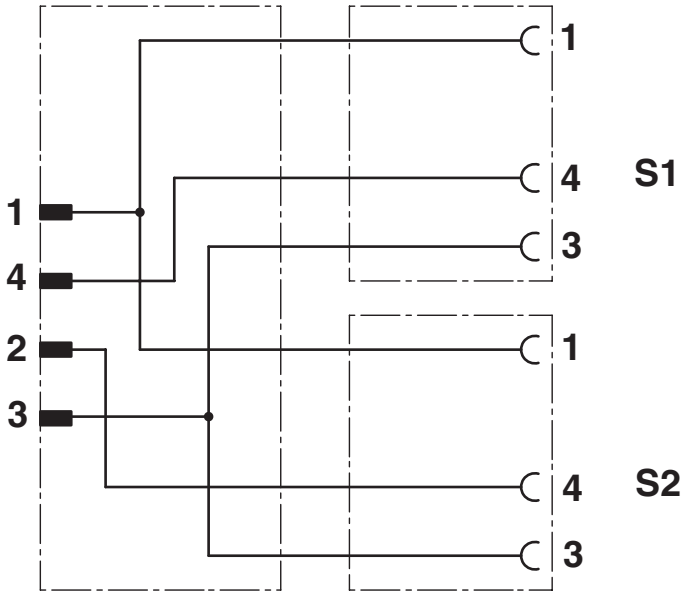

Contact assignment of M12 plugs / M8 sockets

Approvals

To download certificates, visit the product detail page: https://www.phoenixcontact.com/us/products/1671399

UL Listed
Approval ID: FILE E 221474

	Nominal voltage U_N	Nominal current I_N	Cross section AWG	Cross section mm^2
keine				
	60 V	4 A	-	-

cUL Listed
Approval ID: FILE E 221474

	Nominal voltage U_N	Nominal current I_N	Cross section AWG	Cross section mm^2
keine				
	60 V	4 A	-	-

EAC-RoHS
Approval ID: RU D-DE.HB35.B.00387

Classifications

ECLASS

ECLASS-13.0	27060313
ECLASS-15.0	27060313

ETIM

ETIM 10.0	EC001855

UNSPSC

UNSPSC 21.0	26121600

Environmental product compliance

EU RoHS

Fulfills EU RoHS substance requirements	Yes, No exemptions

China RoHS

Environment friendly use period (EFUP)	EFUP-E
	No hazardous substances above the limits

EU REACH SVHC

REACH candidate substance (CAS No.)	No substance above 0.1 wt%

EF3.1 Climate Change

CO2e kg	0.609 kg CO2e

Phoenix Contact 2026 © - all rights reserved
https://www.phoenixcontact.com

Phoenix Contact USA
586 Fulling Mill Road
Middletown, PA 17057, United States
(+717) 944-1300
info@phoenixcon.com