Q 1,5/2FL/11-11KU-ESA - Panel feed-through

1670293

https://www.phoenixcontact.com/us/products/1670293

Please be informed that the data shown in this PDF document is generated from our online catalog. Please find the complete data in the user documentation. Our general terms of use for downloads are valid.



QUICKON panel feed-through, for external panel mounting with manual solder/slip-on connection, 4.8 x 0.8 mm, 2-pos.

Your advantages

- Robust throughout: housing with IP65/IP67 protection for a wide range of applications

Commercial data

Item number	1670293
Packing unit	10 pc
Minimum order quantity	1 pc
Sales key	BF50
Product key	AF6HAB
GTIN	4017918146443
Weight per piece (including packing)	21.12 g
Weight per piece (excluding packing)	16.34 g
Customs tariff number	85369010
Country of origin	PL

Technical data

Product properties

Product type	Panel feed-through
Number of positions	2
Position marking	1, 2
Number of connections	2
Number of connections per position	1
Shielded	no

Insulation characteristics

Overvoltage category	III
Degree of pollution	3

Connection data

Connection technology

Connection method On the device side	Manual solder/slip on connection
Connection method On the field side	IDC connection
Frequency of connections between conductors of the same cross section	10 (if the conductor is connected more than once, seal and cap may need to be replaced.)

Conductor connection

Conductor cross-section flexibel	0.75 mm² ... 1.5 mm²
Conductor cross-section solid	0.75 mm² ... 1 mm²
Connection cross section AWG	18 ... 16
Tightening torque Union nut	2.5 Nm
Tightening torque Contact carrier	3.75 Nm
Tightening torque Locking nut	3.75 Nm
Wrench size Union nut	22 mm
Wrench size Contact carrier	22 mm

Dimensions

Dimensional drawing	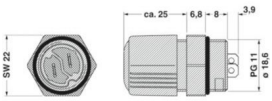
Width	22 mm
Height	22 mm
Length	43.7 mm

Electrical properties

Rated surge voltage (III/3)	6 kV
Contact resistance	< 3 mΩ
rated voltage (II/2)	630 V (with insulating sleeve)
rated voltage (III/2)	320 V (with insulating sleeve)
Rated voltage (III/3)	250 V (with insulating sleeve)
Nominal voltage U_N	250 V AC
	250 V DC
Nominal current I_N	17.5 A (15 A with slip-on sleeve 2.5 mm²; 12 A with slip-on sleeve 1.5 mm².)

Material specifications

Color (Housing)	green (RAL 6021)
Material Housing	PA
Flammability rating according to UL 94	V0
Material wire insulation	PVC / PE
Contact material	Copper alloy
Contact surface material	Pre-nickel plated and tin-plated
Contact carrier material	PA 6.6

Cable/line

Structure of individual litz in acc. with VDE 0295 / smallest wire diameter	VDE 0295 Cl.2-5, min. wire diameter 0.2 mm
Wire diameter including insulation	>= 3 mm
Position marking	1, 2

Mounting

Mounting type	Front mounting Pg11
Assembly note	If the conductor is reconnected, it must be cut off above the last contact point. QUICKON components may only be operated when under no load.

Environmental and real-life conditions

Ambient conditions

Degree of protection	IP65
	IP67
Impact strength	IK06
Ambient temperature (operation)	-25 °C ... 80 °C (Specifications of the cable manufacturer must be observed.)
	-25 °C ... 50 °C (when the conductor is connected. Specifications of the cable manufacturer must also be observed.)
Temperature when conductor connected	-5 °C ... 50 °C

Drawings

Dimensional drawing

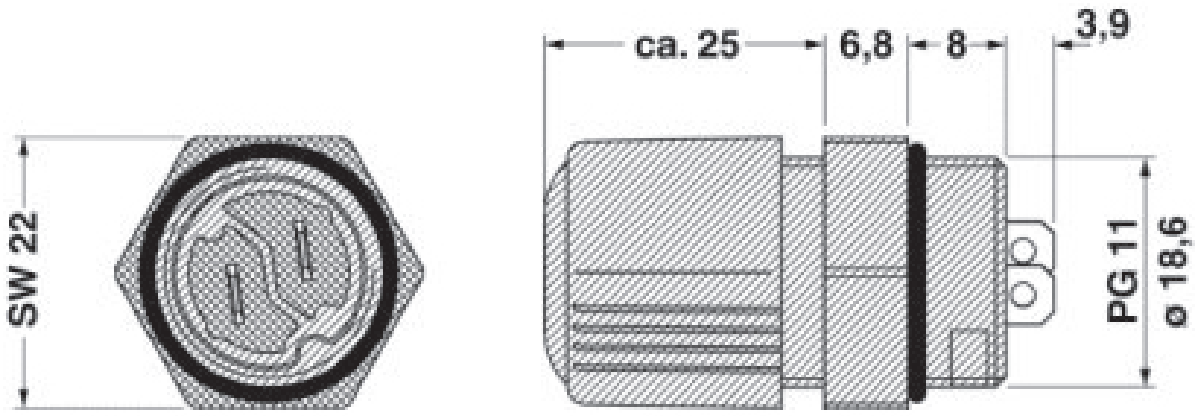

Approvals

To download certificates, visit the product detail page: https://www.phoenixcontact.com/us/products/1670293

cUL Recognized
Approval ID: E118976

	Nominal voltage U_N	Nominal current I_N	Cross section AWG	Cross section mm^2
keine				
	250 V	11 A	-	-

UL Recognized
Approval ID: E118976

	Nominal voltage U_N	Nominal current I_N	Cross section AWG	Cross section mm^2
keine				
	250 V	15 A	-	-

EAC
Approval ID: RU C-DE.A*30.B.01102

Classifications

ECLASS

ECLASS-13.0	27440602
ECLASS-15.0	27440602

ETIM

ETIM 10.0	EC002566

UNSPSC

UNSPSC 21.0	39121500

Environmental product compliance

EU RoHS

Fulfills EU RoHS substance requirements	Yes, No exemptions

China RoHS

Environment friendly use period (EFUP)	EFUP-E
	No hazardous substances above the limits

EU REACH SVHC

REACH candidate substance (CAS No.)	No substance above 0.1 wt%

EF3.1 Climate Change

CO2e kg	0.243 kg CO2e

Phoenix Contact 2026 © - all rights reserved
https://www.phoenixcontact.com

Phoenix Contact USA
586 Fulling Mill Road
Middletown, PA 17057, United States
(+717) 944-1300
info@phoenixcon.com