CK4,0-ED-1,50ST AG - Crimp contact

1663239

https://www.phoenixcontact.com/us/products/1663239

Please be informed that the data shown in this PDF document is generated from our online catalog. Please find the complete data in the user documentation. Our general terms of use for downloads are valid.



Crimp contact, Pin, turned, contact diameter: 4 mm, rated current: 40 A, connection cross section: 1.5 mm^2 ... 1.5 mm^2, AWG 16...16 , contact material: Cu alloy

Commercial data

Item number	1663239
Packing unit	25 pc
Minimum order quantity	25 pc
Sales key	BF65
Product key	AF7AIE
GTIN	4017918123048
Weight per piece (including packing)	2.98 g
Weight per piece (excluding packing)	3.09 g
Customs tariff number	85366990
Country of origin	DE

Technical data

Notes

Notes on the product family	for HC-M-02, HC-M-03, HC-M-03/04, HC-M-04, HC-Q02, HC-Q03, HC-Q04, and HC-COM-Q4/2 contact carriers
Assembly note	The quality of a crimp connection is determined by DIN EN 60352-2.
Assembly note	Note on crimp connection technology: For flexible wires only. The specified conductor cross-sections refer to the nominal cross-section of the cable used. The wiring space of the crimp connection technology is designed for fine-stranded cables in accordance with VDE 0295 Class 5. Deviating cable structures (e.g., Class 1.2 and 6 or AWG cables) should be checked before use.

Product properties

Product type	Crimp contact
Contact material type	turned

Connection data

Connection technology

Contact connection type	Pin
Connection method	Crimp connection

Conductor connection

Stripping length	9 mm
Connection cross section	1.5 mm² ... 1.5 mm²
Connection cross section AWG	16 ... 16

Material specifications

Material Contact	Cu alloy
Material Contact surface	Ag

Dimensions

Dimensional drawing	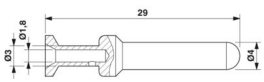
Diameter (Contact diameter)	4 mm

Electrical properties

Rated current	40 A (Take into account the derating of the contact insert used. The rated current corresponds to the maximum possible connection cross-section.)

Mechanical properties

Mechanical data

Insertion/withdrawal cycles	≥ 500

Environmental and real-life conditions

Ambient conditions

Ambient temperature (operation)	-40 °C ... 125 °C

Drawings

Dimensional drawing

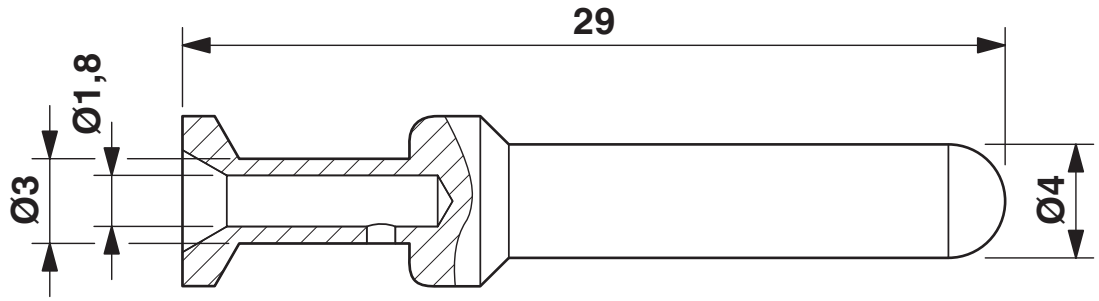

Dimensional drawing

Approvals

To download certificates, visit the product detail page: https://www.phoenixcontact.com/us/products/1663239

EAC
Approval ID: RU C-DE.AI30.B.01102

Classifications

ECLASS

ECLASS-13.0	27440204
ECLASS-15.0	27440204

ETIM

ETIM 10.0	EC000796

UNSPSC

UNSPSC 21.0	39121500

Environmental product compliance

EU RoHS

Fulfills EU RoHS substance requirements	Yes, No exemptions

China RoHS

Environment friendly use period (EFUP)	EFUP-E
	No hazardous substances above the limits

EU REACH SVHC

REACH candidate substance (CAS No.)	No substance above 0.1 wt%

EF3.1 Climate Change

CO2e kg	0.047 kg CO2e

Phoenix Contact 2026 © - all rights reserved
https://www.phoenixcontact.com

Phoenix Contact USA
586 Fulling Mill Road
Middletown, PA 17057, United States
(+717) 944-1300
info@phoenixcon.com