SACC-M12MS-5CON-PG 7-M - Connector

1663116

https://www.phoenixcontact.com/us/products/1663116

Please be informed that the data shown in this PDF document is generated from our online catalog. Please find the complete data in the user documentation. Our general terms of use for downloads are valid.



Connector, Universal, 5-position, Plug straight M12, coding: A, Screw connection, knurl material: Zinc die-cast, nickel-plated, cable gland Pg7, external cable diameter 4 mm ... 6 mm

Your advantages

- Safe use in the field, thanks to a high degree of protection
- Screw connection: proven connection technology for a large selection of different conductors

Commercial data

Item number	1663116
Packing unit	1 pc
Minimum order quantity	1 pc
Sales key	BF30
Product key	AF2CAA
GTIN	4017918116583
Weight per piece (including packing)	23.13 g
Weight per piece (excluding packing)	23.13 g
Customs tariff number	85366990
Country of origin	DE

Technical data

Notes

Assembly note	NOTE: Observe the permissible bending radii when routing cables, since the degree of protection may be at risk if the bending forces are too high. Reduce mechanical loads upstream of the connector, e.g., by using cable ties.

Mounting

Assembly note	The wires can be connected both with ferrules and without ferrules

Product properties

Product type	Circular connector (cable-side)
Number of positions	5
No. of cable outlets	1
Shielded	no
Coding	A
Cable outlet	straight
Pg screw connection	Pg7

Insulation characteristics

Overvoltage category	II
Degree of pollution	3

Dimensions

Dimensional drawing	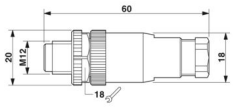
Width	20 mm
Height	20 mm
Length	60 mm

External dimensions

Outside diameter	4 mm ... 6 mm

Housing

Diameter housing	20 mm

Material specifications

Flammability rating according to UL 94	HB
Seal material	NBR
Material of grip body	PA
Contact material	CuZn

Contact surface material	CuSnZn
Contact carrier material	PA
Material for screw connection	Zinc die-cast, nickel-plated

Connection data

Conductor connection

Connection method	Screw connection
Connection cross section	0.25 mm² ... 0.75 mm² (without ferrule)
	0.14 mm² ... 0.75 mm² (with ferrule)
	0.25 mm² ... 0.75 mm² (solid)
Connection cross section AWG	24 ... 18 (without ferrule)
	26 ... 20 (with ferrule)
Stripping length of the individual wire	5 mm
Tightening torque	0.4 Nm (M12 knurl)
	0.2 Nm (Screw terminal blocks)
	0.8 Nm ... 1 Nm (Pressure screw)

Electrical properties

Rated surge voltage	1.5 kV
Insulation resistance	≥ 100 MΩ
Nominal voltage U_N	48 V AC
	60 V DC
Nominal current I_N	4 A

Mechanical properties

Mechanical data

Insertion/withdrawal cycles	≥ 50

Connector

Connection 1

Head design	Plug
Head cable outlet	straight
Head thread type	M12
Coding	A

Interfaces

Signal type/category	Universal

Environmental and real-life conditions

Ambient conditions

Degree of protection	IP67
Ambient temperature (operation) (male connector/female connector)	-40 °C ... 85 °C (Plug / socket)

Standards and regulations

Standard designation	M12 connector
Standards/specifications	IEC 61076-2-101

Drawings

Dimensional drawing

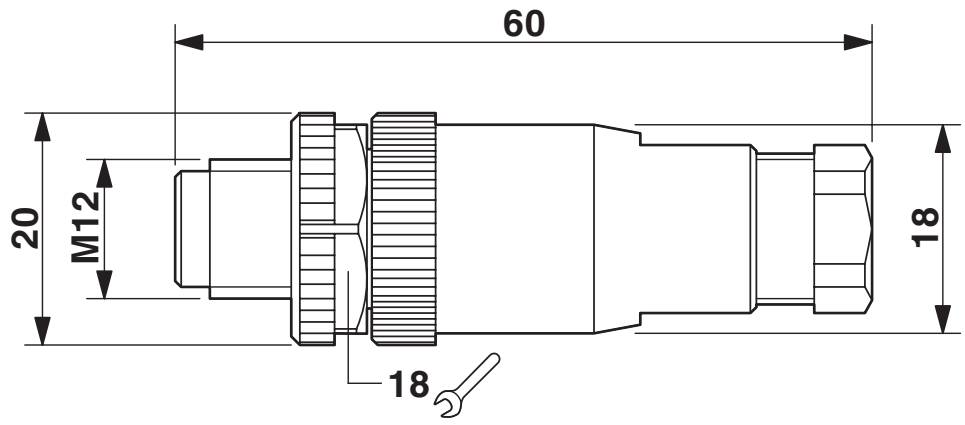

Plug, M12 x 1, straight

Schematic diagram

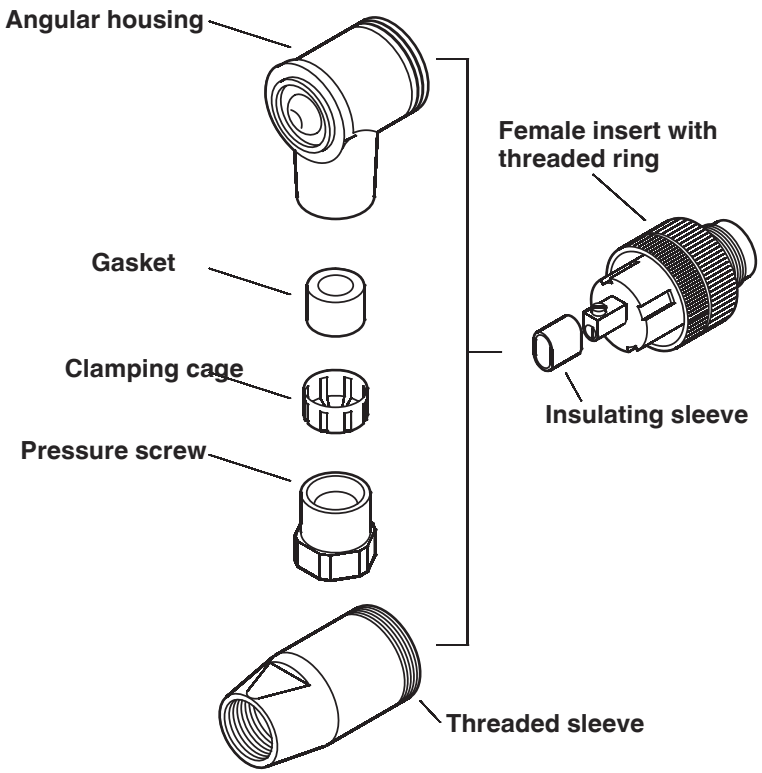

Male/Female M12

Schematic diagram

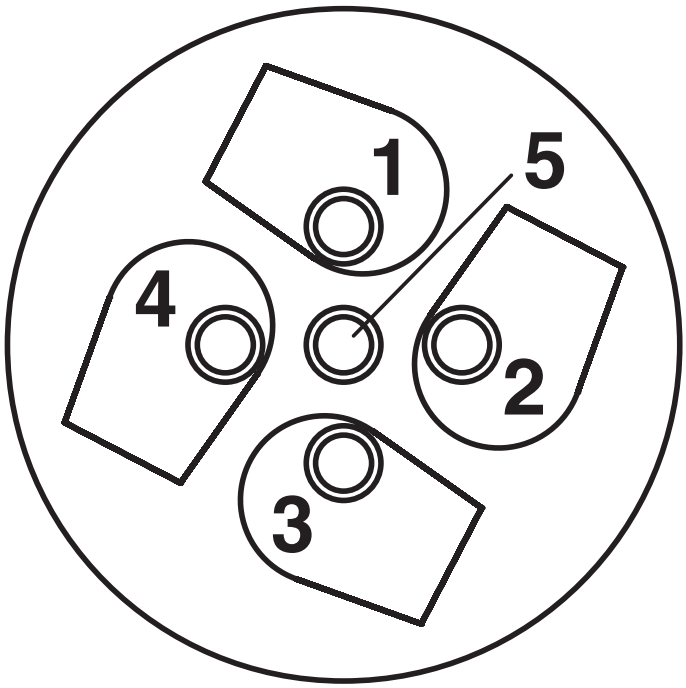

Cable connection side M12 (screw connection)

Schematic diagram

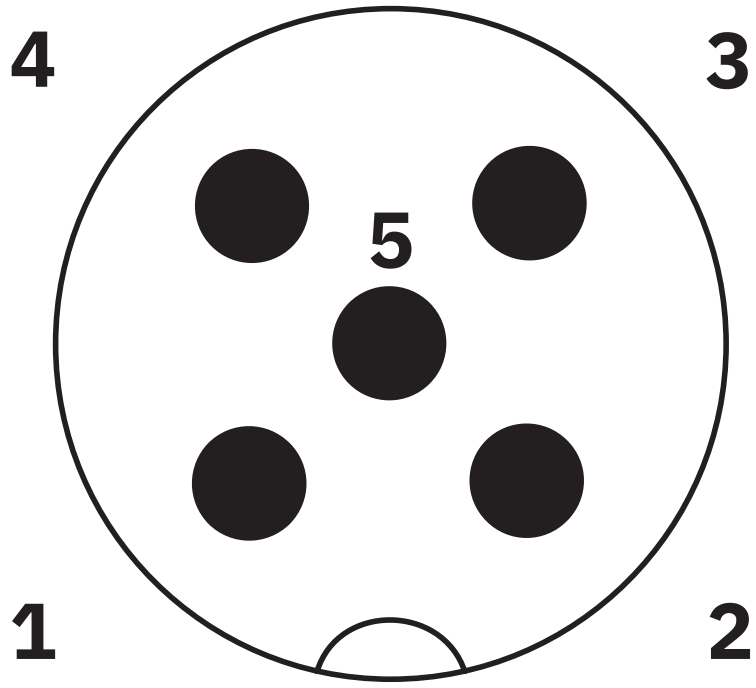

Pin assignment M12 male connector, 5-pos., A-coded, male side

Approvals

To download certificates, visit the product detail page: https://www.phoenixcontact.com/us/products/1663116

cUL Recognized
Approval ID: FILE E 221474

	Nominal voltage U_N	Nominal current I_N	Cross section AWG	Cross section mm^2
keine				
	60 V	4 A	-	-

UL Recognized
Approval ID: FILE E 221474

	Nominal voltage U_N	Nominal current I_N	Cross section AWG	Cross section mm^2
keine				
	60 V	4 A	-	-

Classifications

ECLASS

ECLASS-13.0	27440116
ECLASS-15.0	27440116

ETIM

ETIM 10.0	EC002635

UNSPSC

UNSPSC 21.0	39121400

Environmental product compliance

EU RoHS

Fulfills EU RoHS substance requirements	Yes
Exemption	6(c)

China RoHS

Environment friendly use period (EFUP)	EFUP-50
	An article-related China RoHS declaration table can be found in the download area for the respective article under "Manufacturer declaration". For all articles with EFUP-E, no China RoHS declaration table issued and required.

EU REACH SVHC

REACH candidate substance (CAS No.)	Lead(CAS: 7439-92-1)
SCIP	d93bebd2-5471-4cb7-a9e9-24611f594177

EF3.1 Climate Change

CO2e kg	0.524 kg CO2e

Phoenix Contact 2026 © - all rights reserved
https://www.phoenixcontact.com

Phoenix Contact USA
586 Fulling Mill Road
Middletown, PA 17057, United States
(+717) 944-1300
info@phoenixcon.com