VS-PP-F-RJ45-CAT6 - DIN rail adapter

1658118

https://www.phoenixcontact.com/us/products/1658118

Please be informed that the data shown in this PDF document is generated from our online catalog. Please find the complete data in the user documentation. Our general terms of use for downloads are valid.

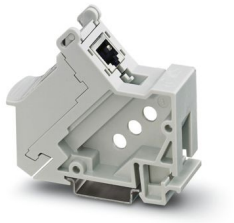

Commercial data

Item number	1658118
Packing unit	1 pc
Note	Made to order (non-returnable)
Sales key	NULL
Product key	ABNMAY
GTIN	4046356149174
Weight per piece (including packing)	60.6 g
Weight per piece (excluding packing)	60.6 g
Customs tariff number	85369010
Country of origin	CH

Technical data

Product properties

Product type	Patch panel
Application	Ethernet
Number of positions	8
No. of cable outlets	1
Number of slots	1
Shielded	yes

Electrical properties

Rated voltage (III/3)	50 V
Rated surge voltage	≥ 1 kV
Rated current	1 A
Frequency range	250 MHz
Insulation resistance	≥ 500 MΩ
Transmission speed	1 Gbps
Transmission characteristics (category)	CAT6

Connection data

Connection method	IDC fast connection

Dimensions

Dimensional drawing	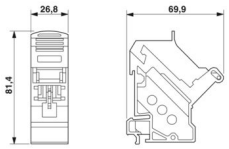
Width	26.8 mm
Height	71 mm
Length	81.4 mm

Material specifications

Color	gray
Flammability rating according to UL 94	V0
Housing material	PC-GF
Contact material	Copper alloy
Contact surface material	Gold over nickel
Contact carrier material	PC

Cable/line

External cable diameter	4.5 mm ... 8 mm

Mechanical properties

Mechanical data

Insertion/withdrawal cycles	≥ 750

Environmental and real-life conditions

Ambient conditions

Degree of protection	IP20
	IP20
Enclosure rating (NEMA)	1
Ambient temperature (operation)	-10 °C ... 60 °C
Ambient temperature (storage/transport)	-40 °C ... 70 °C

Mounting

Mounting type	DIN rail mounting
Assembly note	DIN rail NS 35
	For mounting on 35 mm standard DIN rail in accordance with DIN EN 60715

Drawings

Dimensional drawing

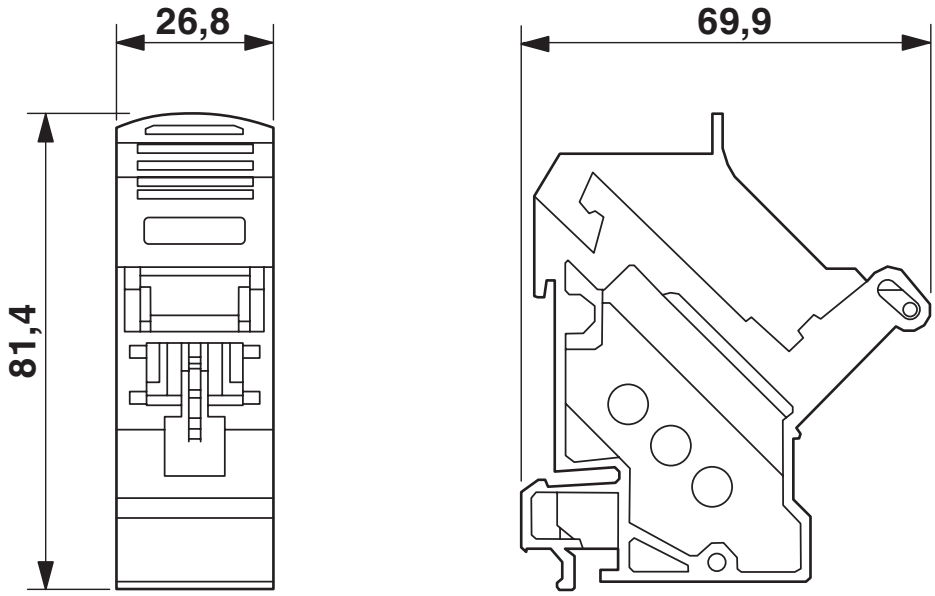

RJ45 patch panel

Environmental product compliance

EU RoHS

Fulfills EU RoHS substance requirements	Yes, No exemptions

China RoHS

Environment friendly use period (EFUP)	EFUP-E
	No hazardous substances above the limits

EU REACH SVHC

REACH candidate substance (CAS No.)	No substance above 0.1 wt%

Phoenix Contact 2026 © - all rights reserved
https://www.phoenixcontact.com

Phoenix Contact USA
586 Fulling Mill Road
Middletown, PA 17057, United States
(+717) 944-1300
info@phoenixcon.com