VS-PC-2XHCS-200-SCRJ/SCRJ-1 - FO connecting cable

1654934

https://www.phoenixcontact.com/us/products/1654934

Please be informed that the data shown in this PDF document is generated from our online catalog. Please find the complete data in the user documentation. Our general terms of use for downloads are valid.



Assembled FO cable, breakout cable, 200/230 µm PCF fiber, SC-RJ/IP20 to SC-RJ/IP20, for installation inside control cabinets, length: 1 m

Commercial data

Item number	1654934
Packing unit	1 pc
Minimum order quantity	1 pc
Note	Made to order (non-returnable)
Sales key	AB16
Product key	ABNIBB
GTIN	4046356028905
Weight per piece (including packing)	45.9 g
Weight per piece (excluding packing)	45.9 g
Customs tariff number	85447000
Country of origin	CZ

Technical data

Product properties

Product type	Data cable preassembled
Number of positions	2
Connection profile	SCRJ in accordance with DIN EN 50377-6-1

Interfaces

Signal type/category	Ethernet

Electrical properties

Attenuation	≤ 1.2 dB (with 850 nm)
Transmission medium	PCF fiber

Mechanical properties

Mechanical data

Insertion/withdrawal cycles	≥ 1000

Material specifications

Housing material	PBT
Outer sheath, material	TPE-O

Dimensions

Mechanical characteristics

Ferrule diameter	2.5 mm

Connector

Connection 1

Type	Plug straight SC-RJ
Degree of protection	IP20

Connection 2

Type	Plug straight SC-RJ
Degree of protection	IP20

Cable/line

Cable type	Polymer Clad Fiber (PCF)
Cable type	Breakout
Outer sheath, material	TPE-O
External sheath, color	orange
Individual wire diameter	2.2 mm
Smallest bending radius, fixed installation	50 mm
Smallest bending radius, movable installation	50 mm

Resistance to oil	yes
Flame resistance	yes, in accordance with IEC 60332-1-2 and in accordance with IEC 60332-3-22 Cat A

FO cable

Number of fibers	2
Fiber	200/230 µm
Fiber type	PCF fiber A3C
Cable, attenuation	10 dB/km (650 nm), 8 dB/km (at 850 nm)
Transmission medium	PCF fiber

Environmental and real-life conditions

Ambient conditions

Degree of protection	IP20
	IP20
Ambient temperature (operation) (fixed installation)	-40 °C ... 70 °C
Ambient temperature (operation) (flexible installation)	-20 °C ... 70 °C
Ambient temperature (operation) (male connector/female connector)	-20 °C ... 70 °C
Ambient temperature (storage/transport)	-40 °C ... 70 °C
Ambient temperature (assembly)	-5 °C ... 50 °C
Resistance to oil	yes

Standards and regulations

Flame resistance	yes, in accordance with IEC 60332-1-2 and in accordance with IEC 60332-3-22 Cat A
Resistance to oil	yes

Drawings

Dimensional drawing

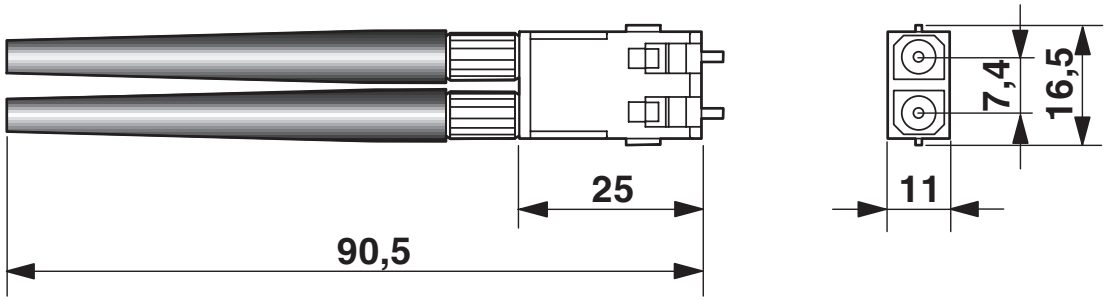

SC-RJ connector IP20

Schematic diagram

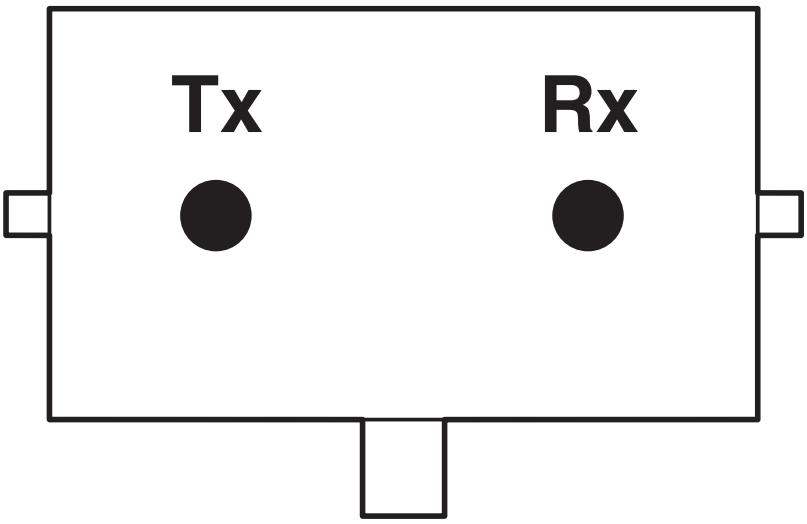

Pin assignment plug SCRJ

Schematic diagram

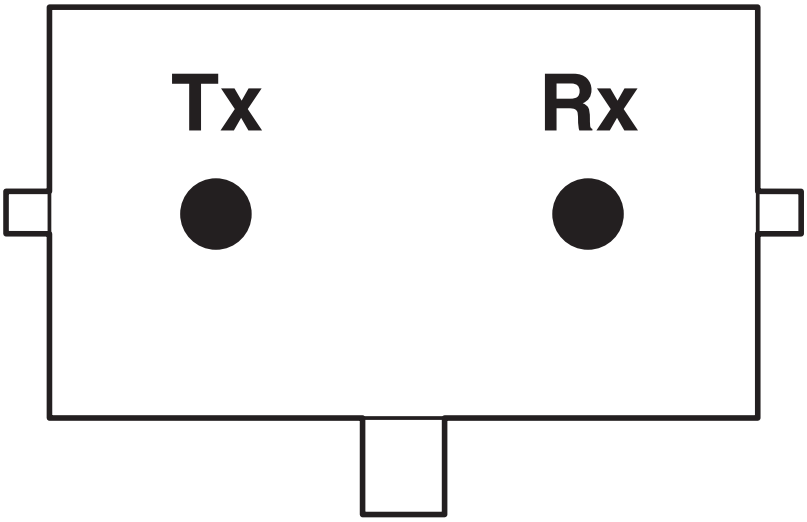

Pin assignment plug SCRJ

Classifications

UNSPSC

UNSPSC 21.0	26121607

Environmental product compliance

China RoHS

Environment friendly use period (EFUP)	EFUP-50
	An article-related China RoHS declaration table can be found in the download area for the respective article under "Manufacturer declaration". For all articles with EFUP-E, no China RoHS declaration table issued and required.

EU REACH SVHC

REACH candidate substance (CAS No.)	No substance above 0.1 wt%

Phoenix Contact 2026 © - all rights reserved
https://www.phoenixcontact.com

Phoenix Contact USA
586 Fulling Mill Road
Middletown, PA 17057, United States
(+717) 944-1300
info@phoenixcon.com