SAC-8P-P12MS/ 3,0-PUR/P12FR - Sensor/actuator cable

1649270

https://www.phoenixcontact.com/us/products/1649270

Please be informed that the data shown in this PDF document is generated from our online catalog. Please find the complete data in the user documentation. Our general terms of use for downloads are valid.



Sensor/actuator cable, 8-position, PUR halogen-free, black-gray RAL 7021, Plug straight M12 Push Pull, coding: A, on Socket angled M12 Push Pull, coding: A, cable length: 3 m

Your advantages

- Easy and safe: 100 % electrically tested plug-in components
- Save time, thanks to installation with push-pull fast locking

Commercial data

Item number	1649270
Packing unit	1 pc
Minimum order quantity	1 pc
Note	Made to order (non-returnable)
Sales key	BF03
Product key	AF1CFA
GTIN	4067923182509
Weight per piece (including packing)	22.22 g
Weight per piece (excluding packing)	22.22 g
Customs tariff number	85444290
Country of origin	PL

Technical data

Product properties

Product type	Sensor/actuator cable
Application	Standard
Number of positions	8
Shielded	no

Electrical properties

Nominal voltage U_N	30 V AC
	30 V DC
Nominal current I_N	2 A

Connector

Connection 1

Dimensional drawing	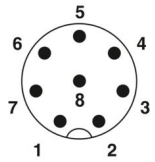 M12 Push-Pull male pin assignment, 8-pos., pin-side view
Type	M12 Plug, straight, 8-position, Push Pull, Keying: A, Universal
Number of positions	8
Shielded	no
Signal type/category	Universal
Insertion/withdrawal cycles	≥ 100
Insulation resistance	≥ 100 Ω
Overvoltage category	II
Degree of pollution	3
Material Contact	CuSn
Material Contact surface	Ni/Au
Material Contact carrier	PK
Material Grip body	TPU, hardly inflammable, self-extinguishing
Material Seal	FKM
Material Release	Die-cast zinc, nickel-plated
Flammability rating according to UL 94	V0
Degree of protection	IP65
	IP67
Ambient temperature (operation)	-25 °C ... 85 °C
Standard designation	M12-Push-Pull
Standards/regulations	IEC 61076-2-010

Connection 2

Dimensional drawing	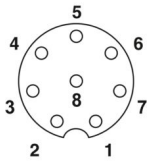 Pin assignment M12 socket, 8-pos., A-coded, view female side
Type	M12 Socket, angled, 8-position, Push Pull, Keying: A, Universal
Number of positions	8
Shielded	no
Signal type/category	Universal
Insertion/withdrawal cycles	≥ 100
Insulation resistance	≥ 100 MΩ
Overvoltage category	II
Degree of pollution	3
Material Contact	CuZn
Material Contact surface	Ni/Au
Material Contact carrier	PA
Material Grip body	TPU, hardly inflammable, self-extinguishing
Material Seal	FKM
Material Release	Die-cast zinc, nickel-plated
Flammability rating according to UL 94	V0
Degree of protection	IP65 IP67
Ambient temperature (operation)	-25 °C ... 85 °C
Standard designation	M12 connector
Standards/regulations	IEC 61076-2-010

Cable/line

Cable length	3 m

PUR halogen-free black [PUR]

Dimensional drawing	
Cable weight	46 kg/km
UL AWM Style	20549 / 10493 (80°C/300 V)
Number of positions	8

Shielded	no
Cable type	PUR halogen-free black [PUR]
Conductor structure signal line	32x 0.10 mm
AWG signal line	24
Conductor cross-section	8x 0.25 mm² (Signal line)
Wire diameter incl. insulation	1.17 mm ±0.02 mm
External cable diameter	5.90 mm ±0.15 mm
Outer sheath, material	PUR
External sheath, color	black-gray RAL 7021
Conductor material	Bare Cu litz wires
Material, filler	PE
Material wire insulation	PP
Single wire, color	white, brown, green, yellow, gray, pink, blue, red
Thickness, insulation	≥ 0.21 mm
Thickness, outer sheath	approx. 0.80 mm
Overall twist	8 wires around filler to the core
Max. conductor resistance	≤ 78 Ω/km (at 20 °C)
Insulation resistance	≥ 1 GΩ*km (at 20 °C)
Wave impedance	100 Ω +15 % (with 1 MHz)
Cable capacity	≤ 70 pF/m
Nominal voltage, cable	≤ 300 V
Test voltage	≥ 3000 V
Minimum bending radius, fixed installation	8 x D
Minimum bending radius, flexible installation	10 x D
Smallest bending radius, fixed installation	48 mm
Smallest bending radius, movable installation	59 mm
Dynamic load capacity (bending)	Max. bending cycles: 10000000, Bending radius: 59 mm, Traversing path: 10 m, Traversing rate: 3 m/s, Acceleration: 10 m/s²
Dynamic load capacity (torsion)	Torsion: ±180 °/m, Torsion cycles: ≥5000000, Torsional frequency: 35 cycles/min.
Halogen-free	in accordance with DIN VDE 0472 part 815
Flame resistance	in accordance with UL 758/1581 FT2
	According to DIN EN 60332-2-2 (20 s)
Resistance to oil	in accordance with DIN EN 60811-2-1
Other resistance	Highly resistant to acids, alkaline solutions and solvents
	hydrolysis and microbe resistant
	partly UV-resistant (in accordance with DIN EN ISO 4892-2-A)
	Low adhesion
	abrasion-resistant
Special properties	Flexible cable conduit capable
	Silicone-free
	Free of substances which would hinder coating with paint or varnish
	flexible

Ambient temperature (operation)	-40 °C ... 80 °C (cable, fixed installation)
	-25 °C ... 80 °C (Cable, flexible installation)

Drawings

Dimensional drawing

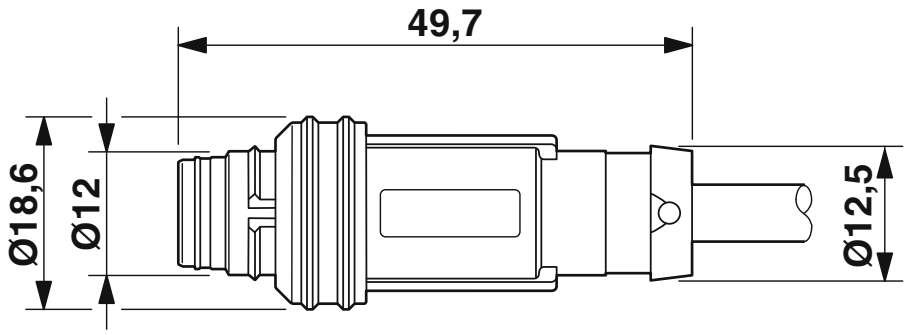

M12 push-pull male connector, straight

Dimensional drawing

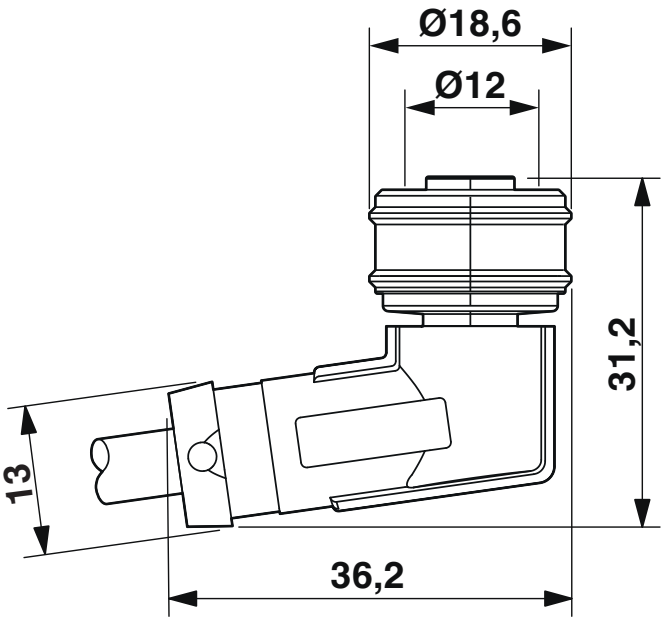

M12 push-pull female connector, angled

Schematic diagram

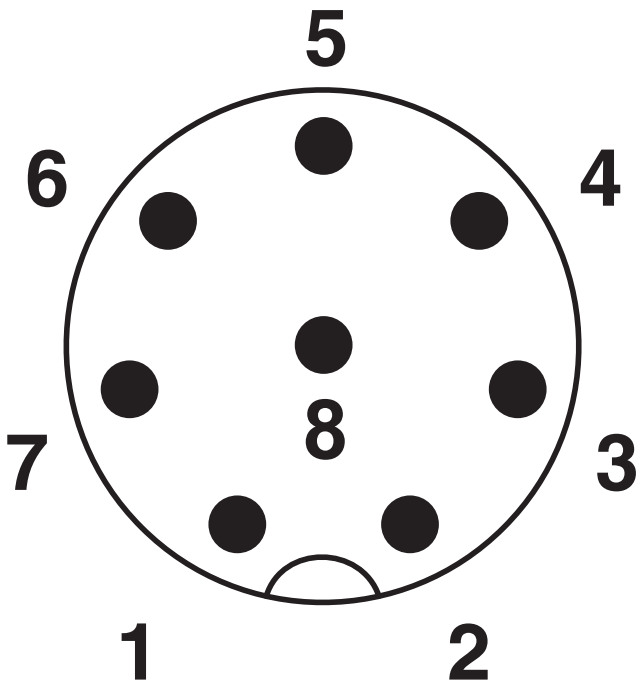

Pin assignment M12 plug, 8-pos., view plug side

Schematic diagram

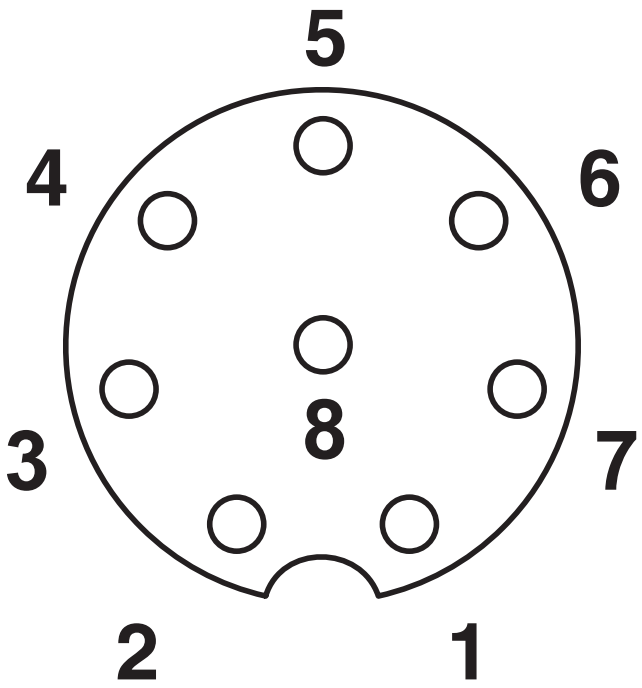

Pin assignment M12 socket, 8-pos., A-coded, view female side

Circuit diagram



Contact assignment of the M12 plug and the M12 socket

Classifications

ECLASS

ECLASS-13.0	27060311
ECLASS-15.0	27060311

ETIM

ETIM 10.0	EC001855

Environmental product compliance

EU RoHS

Fulfills EU RoHS substance requirements	Yes, No exemptions

China RoHS

Environment friendly use period (EFUP)	EFUP-E
	No hazardous substances above the limits

EU REACH SVHC

REACH candidate substance (CAS No.)	No substance above 0.1 wt%

Phoenix Contact 2026 © - all rights reserved
https://www.phoenixcontact.com

Phoenix Contact USA
586 Fulling Mill Road
Middletown, PA 17057, United States
(+717) 944-1300
info@phoenixcon.com