# SAC-8P-P12MS/ 1,5-PUR/P12FS - Sensor/actuator cable

1649268

https://www.phoenixcontact.com/us/products/1649268

Please be informed that the data shown in this PDF document is generated from our online catalog. Please find the complete data in the user documentation. Our general terms of use for downloads are valid.



Sensor/actuator cable, 8-position, PUR halogen-free, black-gray RAL 7021, Plug straight M12 Push Pull, coding: A, on Socket straight M12 Push Pull, coding: A, cable length: 1.5 m

## Your advantages

- Easy and safe: 100 % electrically tested plug-in components
- Save time, thanks to installation with push-pull fast locking

## Commercial data

| | |
|---|---|
| Item number | 1649268 |
| Packing unit | 1 pc |
| Minimum order quantity | 1 pc |
| Note | Made to order (non-returnable) |
| Sales key | BF03 |
| Product key | AF1CFA |
| GTIN | 4067923181748 |
| Weight per piece (including packing) | 97.3 g |
| Weight per piece (excluding packing) | 97.3 g |
| Customs tariff number | 85444290 |
| Country of origin | PL |

## Technical data

### Product properties

| | |
|---|---|
| Product type | Sensor/actuator cable |
| Application | Standard |
| Number of positions | 8 |
| Shielded | no |

### Electrical properties

| | |
|---|---|
| Nominal voltage $U_N$ | 30 V AC |
| | 30 V DC |
| Nominal current $I_N$ | 2 A |

### Connection data

Connection technology

| | |
|---|---|
| Connection method | Push-Pull |

Conductor connection

| | |
|---|---|
| Connection method | Push-Pull |

### Connector

Connection 1

| | |
|---|---|
| Dimensional drawing | 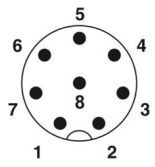 M12 Push-Pull male pin assignment, 8-pos., pin-side view |
| Type | M12 Plug, straight, 8-position, Push Pull, Keying: A, Universal |
| Number of positions | 8 |
| Shielded | no |
| Signal type/category | Universal |
| Insertion/withdrawal cycles | ≥ 100 |
| Insulation resistance | ≥ 100 Ω |
| Overvoltage category | II |
| Degree of pollution | 3 |
| Material Contact | CuSn |
| Material Contact surface | Ni/Au |
| Material Contact carrier | PK |
| Material Grip body | TPU, hardly inflammable, self-extinguishing |
| Material Seal | FKM |
| Material Release | Die-cast zinc, nickel-plated |

| | |
|---|---|
| Flammability rating according to UL 94 | V0 |
| Degree of protection | IP65 |
| | IP67 |
| Ambient temperature (operation) | -25 °C ... 85 °C |
| Standard designation | M12-Push-Pull |
| Standards/regulations | IEC 61076-2-010 |

Connection 2

| | |
|---|---|
| Dimensional drawing | 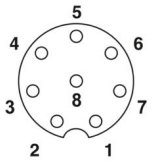<br>Pin assignment M12 socket, 8-pos., A-coded, view female side |
| Type | M12 Socket, angled, 8-position, Push Pull, Keying: A, Universal |
| Number of positions | 8 |
| Shielded | no |
| Signal type/category | Universal |
| Insertion/withdrawal cycles | ≥ 100 |
| Insulation resistance | ≥ 100 MΩ |
| Overvoltage category | II |
| Degree of pollution | 3 |
| Material Contact | CuZn |
| Material Contact surface | Ni/Au |
| Material Contact carrier | PA |
| Material Grip body | TPU, hardly inflammable, self-extinguishing |
| Material Seal | FKM |
| Material Release | Die-cast zinc, nickel-plated |
| Flammability rating according to UL 94 | V0 |
| Degree of protection | IP65 |
| | IP67 |
| Ambient temperature (operation) | -25 °C ... 85 °C |
| Standard designation | M12 connector |
| Standards/regulations | IEC 61076-2-010 |

## Cable/line

| | |
|---|---|
| Cable length | 1.5 m |

PUR halogen-free black [PUR]

| | |
|---|---|
| Dimensional drawing |  |
| Cable weight | 46 kg/km |
| UL AWM Style | 20549 / 10493 (80°C/300 V) |
| Number of positions | 8 |
| Shielded | no |
| Cable type | PUR halogen-free black [PUR] |
| Conductor structure signal line | 32x 0.10 mm |
| AWG signal line | 24 |
| Conductor cross-section | 8x 0.25 mm² (Signal line) |
| Wire diameter incl. insulation | 1.17 mm ±0.02 mm |
| External cable diameter | 5.90 mm ±0.15 mm |
| Outer sheath, material | PUR |
| External sheath, color | black-gray RAL 7021 |
| Conductor material | Bare Cu litz wires |
| Material, filler | PE |
| Material wire insulation | PP |
| Single wire, color | white, brown, green, yellow, gray, pink, blue, red |
| Thickness, insulation | ≥ 0.21 mm |
| Thickness, outer sheath | approx. 0.80 mm |
| Overall twist | 8 wires around filler to the core |
| Max. conductor resistance | ≤ 78 Ω/km (at 20 °C) |
| Insulation resistance | ≥ 1 GΩ*km (at 20 °C) |
| Wave impedance | 100 Ω +15 % (with 1 MHz) |
| Cable capacity | ≤ 70 pF/m |
| Nominal voltage, cable | ≤ 300 V |
| Test voltage | ≥ 3000 V |
| Minimum bending radius, fixed installation | 8 x D |
| Minimum bending radius, flexible installation | 10 x D |
| Smallest bending radius, fixed installation | 48 mm |
| Smallest bending radius, movable installation | 59 mm |
| Dynamic load capacity (bending) | Max. bending cycles: 10000000, Bending radius: 59 mm, Traversing path: 10 m, Traversing rate: 3 m/s, Acceleration: 10 m/s² |
| Dynamic load capacity (torsion) | Torsion: ±180 °/m, Torsion cycles: ≥5000000, Torsional frequency: 35 cycles/min. |
| Halogen-free | in accordance with DIN VDE 0472 part 815 |
| Flame resistance | in accordance with UL 758/1581 FT2 |

| | |
|---|---|
| | According to DIN EN 60332-2-2 (20 s) |
| Resistance to oil | in accordance with DIN EN 60811-2-1 |
| Other resistance | Highly resistant to acids, alkaline solutions and solvents |
| | hydrolysis and microbe resistant |
| | partly UV-resistant (in accordance with DIN EN ISO 4892-2-A) |
| | Low adhesion |
| | abrasion-resistant |
| Special properties | Flexible cable conduit capable |
| | Silicone-free |
| | Free of substances which would hinder coating with paint or varnish |
| | flexible |
| Ambient temperature (operation) | -40 °C ... 80 °C (cable, fixed installation) |
| | -25 °C ... 80 °C (Cable, flexible installation) |

## Drawings

Dimensional drawing

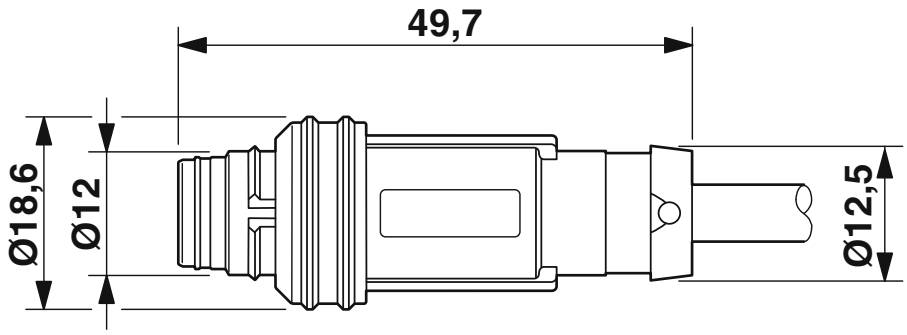


M12 push-pull male connector, straight

Dimensional drawing

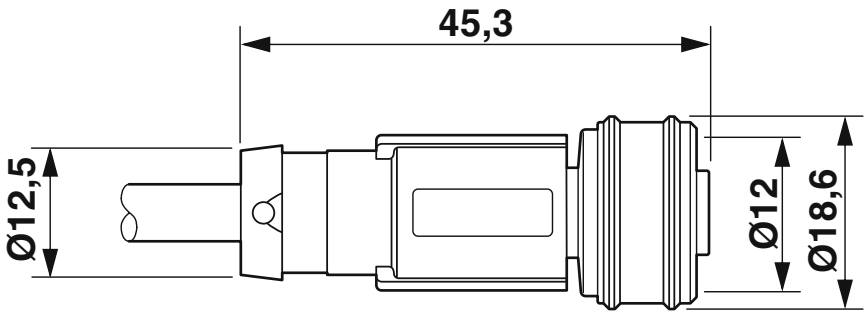


M12 push-pull female connector, straight

Schematic diagram

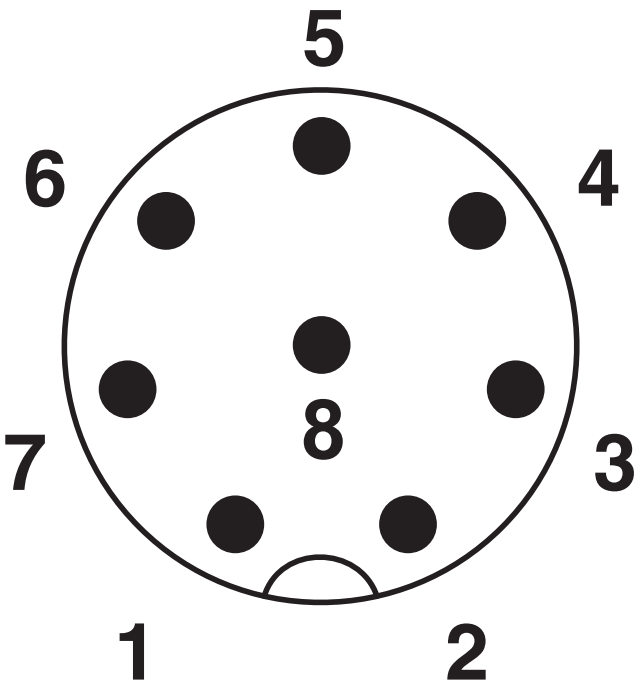


Pin assignment M12 plug, 8-pos., A-coded, view plug side

Schematic diagram

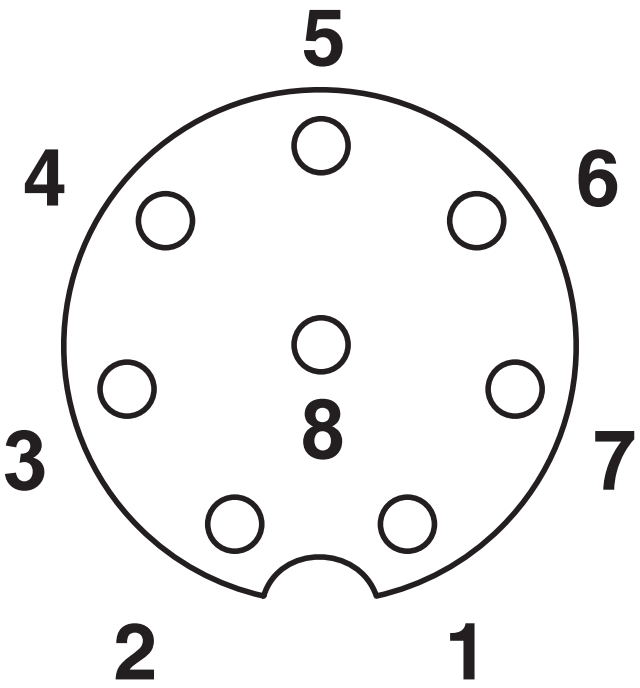


Pin assignment M12 socket, 8-pos., A-coded, view female side

Circuit diagram




Contact assignment of the M12 plug and the M12 socket

## Classifications

### ECLASS

| | |
|---|---|
| ECLASS-13.0 | 27060311 |
| ECLASS-15.0 | 27060311 |

### ETIM

| | |
|---|---|
| ETIM 10.0 | EC001855 |

## Environmental product compliance

EU RoHS

| | |
|---|---|
| Fulfills EU RoHS substance requirements | Yes, No exemptions |

China RoHS

| | |
|---|---|
| Environment friendly use period (EFUP) | EFUP-E |
| | No hazardous substances above the limits |

EU REACH SVHC

| | |
|---|---|
| REACH candidate substance (CAS No.) | No substance above 0.1 wt% |


Phoenix Contact 2026 © - all rights reserved
https://www.phoenixcontact.com



Phoenix Contact USA
586 Fulling Mill Road
Middletown, PA 17057, United States
(+717) 944-1300
info@phoenixcon.com