ENLAR-M-KV-M20/M25 - Extension adapter

1647666

https://www.phoenixcontact.com/us/products/1647666

Please be informed that the data shown in this PDF document is generated from our online catalog. Please find the complete data in the user documentation. Our general terms of use for downloads are valid.

Extension adapter, connecting thread: M20 x 1.5, color: silver-colored, with O-ring



Product description

Extended from M20 to M25

Commercial data

Item number	1647666
Packing unit	10 pc
Minimum order quantity	10 pc
Sales key	BF68
Product key	AF7DZX
GTIN	4017918947071
Weight per piece (including packing)	19.4 g
Weight per piece (excluding packing)	19.39 g
Customs tariff number	74198090
Country of origin	DE

Technical data

Product properties

Product type	Extension adapter

Dimensions

Dimensional drawing	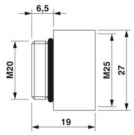
Length	19 mm
Length of the connecting thread	6.5 mm
Length without connecting thread	12.5 mm
Diameter Connecting thread	20 mm
Connecting thread diameter	20 mm
Hexagon angular dimension	27 mm
Thread type connection side	M20 x 1.5
Thread pitch	1.5 mm
Thread type on seal side	M25

Material specifications

Material	Brass, nickel-plated
Seal material	NBR (O-ring)

Cable/line

External cable diameter	15 mm
Halogen-free	no

Environmental and real-life conditions

Ambient conditions

Degree of protection	IP65 (Depends on the screw connection used)
Ambient temperature (operation)	-20 °C ... 80 °C

Mounting

Assembly note	With corresponding screw connection: IP68

Drawings

Dimensional drawing

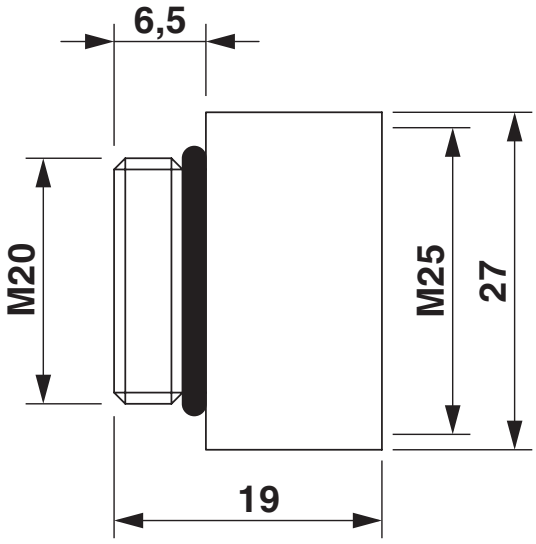

Classifications

ECLASS

ECLASS-13.0	27140806
ECLASS-15.0	27140806

ETIM

ETIM 10.0	EC000938

UNSPSC

UNSPSC 21.0	31163000

Environmental product compliance

EU RoHS

Fulfills EU RoHS substance requirements	Yes
Exemption	6(c)

China RoHS

Environment friendly use period (EFUP)	EFUP-50
	An article-related China RoHS declaration table can be found in the download area for the respective article under "Manufacturer declaration". For all articles with EFUP-E, no China RoHS declaration table issued and required.

EU REACH SVHC

REACH candidate substance (CAS No.)	Lead(CAS: 7439-92-1)
SCIP	d4aceb02-1ef6-4cf1-8d15-205ac5f6fcef

EF3.1 Climate Change

CO2e kg	0.233 kg CO2e

Phoenix Contact 2026 © - all rights reserved
https://www.phoenixcontact.com

Phoenix Contact USA
586 Fulling Mill Road
Middletown, PA 17057, United States
(+717) 944-1300
info@phoenixcon.com