# HC-B 16-SFQD-68/O1M25 - Housing

1646366

https://www.phoenixcontact.com/us/products/1646366

Please be informed that the data shown in this PDF document is generated from our online catalog. Please find the complete data in the user documentation. Our general terms of use for downloads are valid.



HEAVYCON B16 box mounting base, for double locking latch, height: 67 mm, with 1 x M25 gland, with cover

## Commercial data

| | |
|---|---|
| Item number | 1646366 |
| Packing unit | 10 pc |
| Minimum order quantity | 1 pc |
| Product key | AF7AAC |
| GTIN | 4017918954871 |
| Weight per piece (including packing) | 364.7 g |
| Weight per piece (excluding packing) | 364.7 g |
| Country of origin | DE |

## Technical data

### Notes

| | |
|---|---|
| General | For contact inserts HC-B16, BB32, BBB40, D40, DD72, HS6, M, K |

### Product properties

| | |
|---|---|
| Product type | Housing with locking latch |
| Housing type | Surface mounting housing |
| Application | Standard |
| Type | B16 |
| No. of cable outlets | 1 |
| Type of the screw connection | 1x M25 |
| Protective cover | yes |
| Shielded | no |
| Cable outlet | Left (view of the opened protective cover) |
| Pg screw connection | none |

### Dimensions

| | |
|---|---|
| Dimensional drawing | 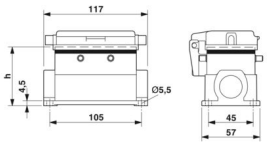 |
| Width | 57 mm |
| Height | 67 mm |
| Length | 117 mm |

### Material specifications

| | |
|---|---|
| Seal material | NBR |
| Housing material | Die-cast aluminum |
| Housing surface material | Powder-coated, gray |
| Material, protective cover | PA |

### Mechanical properties

Mechanical data

| | |
|---|---|
| Type of the screw connection | 1x M25 |
| Locking type | Pin |

### Mounting

| | |
|---|---|
| Assembly note | For half and full screw connections |

### Environmental and real-life conditions

Ambient conditions

| | |
|---|---|
| Degree of protection | IP65 (When plugged in) |
| Ambient temperature (operation) | -40 °C ... 125 °C |

## Drawings

Dimensional drawing

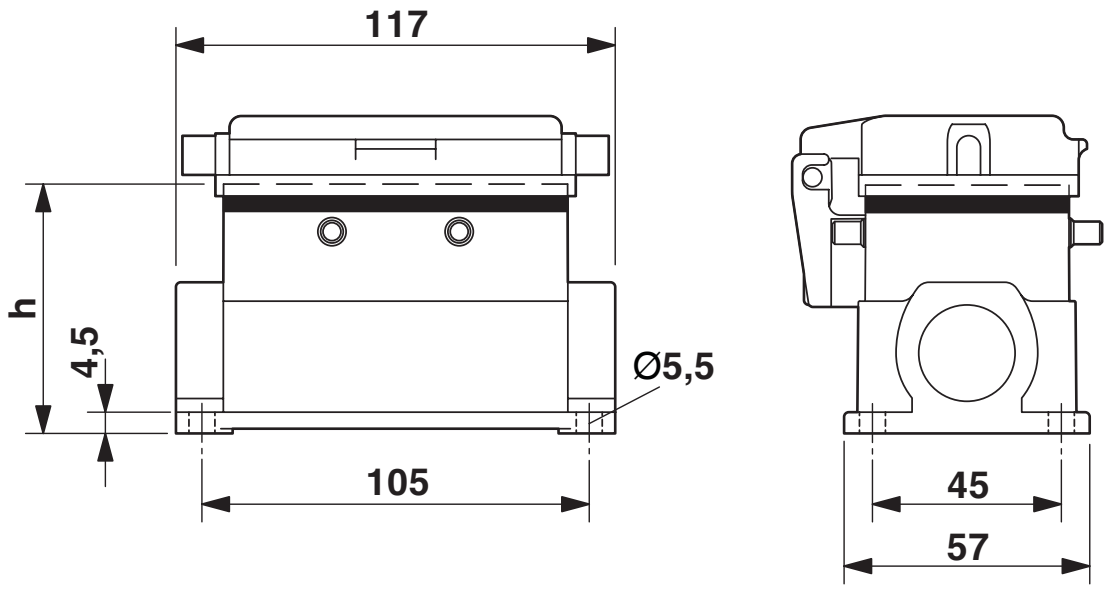


Dimensional drawing

## Classifications

### ECLASS

| | |
|---|---|
| ECLASS-13.0 | 27440202 |
| ECLASS-15.0 | 27440202 |

### UNSPSC

| | |
|---|---|
| UNSPSC 21.0 | 31261501 |

## Environmental product compliance

China RoHS

| | |
|---|---|
| Environment friendly use period (EFUP) | EFUP-E |
| | No hazardous substances above the limits |

EU REACH SVHC

| | |
|---|---|
| REACH candidate substance (CAS No.) | No substance above 0.1 wt% |

Phoenix Contact 2026 © - all rights reserved
https://www.phoenixcontact.com

Phoenix Contact USA
586 Fulling Mill Road
Middletown, PA 17057, United States
(+717) 944-1300
info@phoenixcon.com