SACC-M12MST-4PL-CM M - Power connector

1646347

https://www.phoenixcontact.com/us/products/1646347

Please be informed that the data shown in this PDF document is generated from our online catalog. Please find the complete data in the user documentation. Our general terms of use for downloads are valid.



Power connector, Universal, 4-position, unshielded, Plug straight M12, coding: T, Push-lock spring connection, knurl material: Zinc die-cast, nickel-plated, external cable diameter 6 mm ... 11 mm, Contact 4 leading

Your advantages

- Time-saving Push-Lock connection: Tool-free connection and disconnection of conductors by opening the contact levers
- Intuitive connection: Easy assignment of individual litz wires with color-coded and numerical identification of the contact levers
- Integrated Push-in Technology: Wire rigid and pretreated conductors easily by means of simple, direct insertion
- Shock- and vibration-resistant connection: Proven spring-cage technology guarantees secure and reliable contacting

Commercial data

Item number	1646347
Packing unit	1 pc
Minimum order quantity	1 pc
Sales key	BF33
Product key	AF2CEP
GTIN	4067923233829
Weight per piece (including packing)	34.4 g
Weight per piece (excluding packing)	73.75 g
Customs tariff number	85366990
Country of origin	DE

Technical data

Notes

Assembly note	NOTE: Observe the permissible bending radii when routing cables, since the degree of protection may be at risk if the bending forces are too high. Reduce mechanical loads upstream of the connector, e.g., by using cable ties.

Mounting

Assembly note	The wires can be connected both with ferrules and without ferrules

Product properties

Product type	Circular connector (cable-side)
Application	Power
Number of positions	4
No. of cable outlets	1
Shielded	no
Coding	T
Cable outlet	straight

Insulation characteristics

Overvoltage category	III
Degree of pollution	3

Dimensions

Dimensional drawing	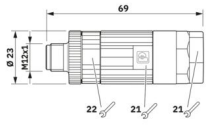
Width	23 mm
Height	23 mm
Length	69 mm

External dimensions

Outside diameter	6 mm ... 11 mm

Housing

Diameter housing	23 mm

Material specifications

Material	PA 6 (Actuation lever)
Flammability rating according to UL 94	V0
Seal material	NBR
Material of grip body	PA 6.6

Contact material	CuSn
Contact surface material	Ni/Au
Contact carrier material	PA 6.6
Material for screw connection	Zinc die-cast, nickel-plated

Connection data

Conductor connection

Connection method	Push-lock spring connection
Connection cross section	1.5 mm² ... 2.5 mm²
	1.5 mm² ... 2.5 mm² (with ferrule)
Connection cross section AWG	16 ... 14 (without ferrule)
	16 ... 14 (with ferrule)
Stripping length of the individual wire	10 mm
Tightening torque	0.6 Nm (M12 knurl)
	3 Nm (Pressure nut with connector housing)

Connection assignment

Contact | Color (signal designation) | Contact (optional)	1 = BN
	2 = WH
	3 = BU
	4 = BK

Electrical properties

Rated surge voltage	1.5 kV
Nominal voltage U_N	63 V DC
Nominal current I_N	12 A (when using 1.5 mm² conductors)
	12 A (at 40 °C)

Mechanical properties

Mechanical data

Insertion/withdrawal cycles	≥ 100

Connector

Connection 1

Head design	Plug
Head cable outlet	straight
Head thread type	M12
Coding	T

Interfaces

Signal type/category	Universal

Environmental and real-life conditions

Ambient conditions

Degree of protection	IP65
	IP67
Ambient temperature (operation) (male connector/female connector)	-40 °C ... 85 °C (Plug / socket)

Standards and regulations

Standard designation	M12 connector
Standards/specifications	according to IEC 61076-2-111

Drawings

Dimensional drawing

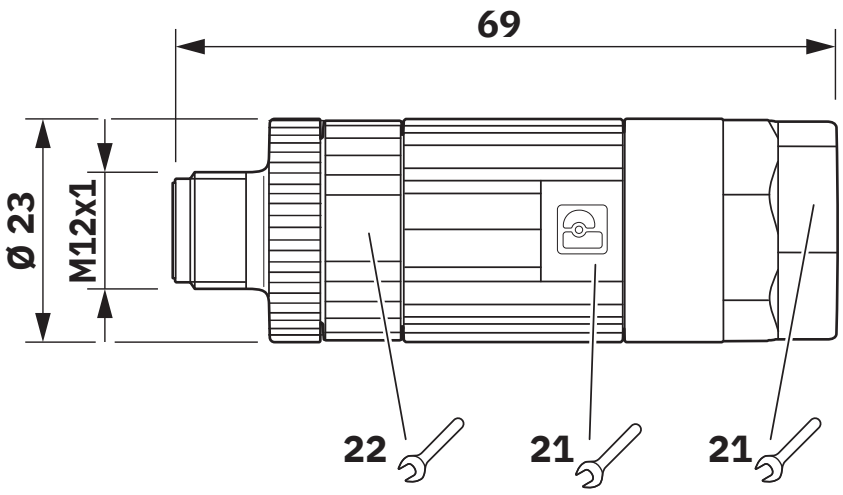

Functional drawing

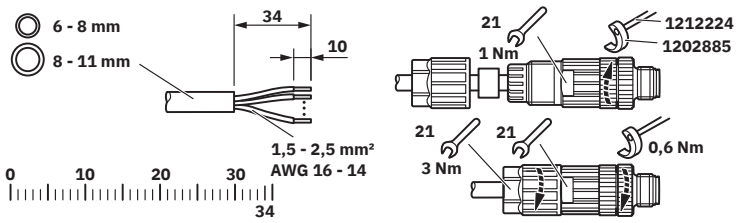

Schematic diagram

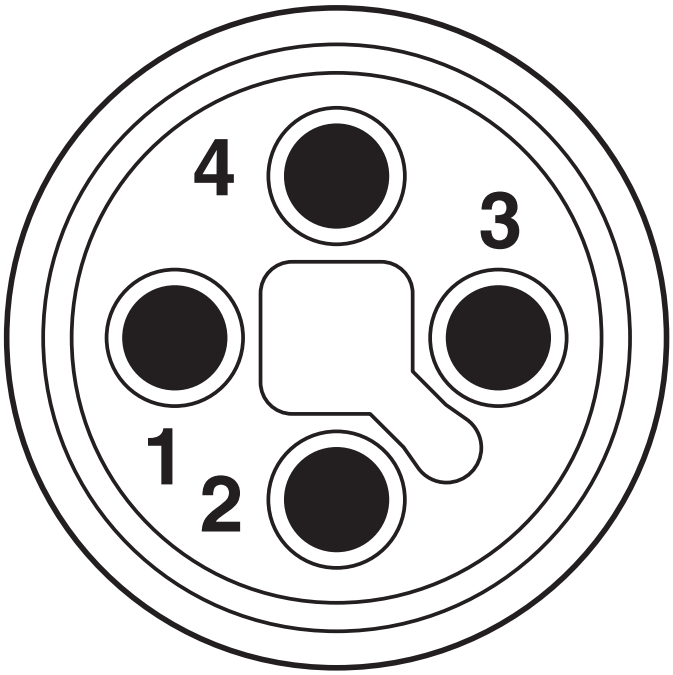

Connector pin assignment of M12 plug, 4-pos., T-coded, view of pin side

Classifications

ECLASS

ECLASS-13.0	27440116
ECLASS-15.0	27440116

ETIM

ETIM 10.0	EC002635

UNSPSC

UNSPSC 21.0	39121400

Environmental product compliance

EU RoHS

Fulfills EU RoHS substance requirements	Yes, No exemptions

China RoHS

Environment friendly use period (EFUP)	EFUP-E
	No hazardous substances above the limits

EU REACH SVHC

REACH candidate substance (CAS No.)	No substance above 0.1 wt%

Phoenix Contact 2026 © - all rights reserved
https://www.phoenixcontact.com

Phoenix Contact USA
586 Fulling Mill Road
Middletown, PA 17057, United States
(+717) 944-1300
info@phoenixcon.com