HC-M-KV-Z-M32 - Cable gland

1646162

https://www.phoenixcontact.com/us/products/1646162

Please be informed that the data shown in this PDF document is generated from our online catalog. Please find the complete data in the user documentation. Our general terms of use for downloads are valid.



Metal screw connection with strain relief clamp, thread length: 8 mm, cable sealing area: 18 - 27 mm, clamping area: 19 - 30 mm, SW 40, screw connection: M32

Commercial data

Item number	1646162
Packing unit	10 pc
Minimum order quantity	10 pc
Sales key	BF68
Product key	AF7DFX
GTIN	4017918941307
Weight per piece (including packing)	154.6 g
Weight per piece (excluding packing)	150.35 g
Customs tariff number	74198090
Country of origin	DE

Technical data

Product properties

Product type	Cable screw gland
Application	Standard
No. of conductors	1
Manufacturer	wafi
Shielded	no

Dimensions

Dimensional drawing	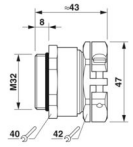
Length	43 mm
Length of the connecting thread	8 mm
Length without connecting thread	35 mm
Diameter Connecting thread	32 mm
Connecting thread diameter	32 mm
Wrench size, union nut	42 mm
Wrench size, support	40 mm
Clamping range of the strain relief clip	19.00 mm ... 27.00 mm
Hexagon angular dimension	47 mm
Thread type connection side	M32 x 1.5
Thread pitch	1.5 mm

Connection data

Tightening torque	18 Nm (Support sleeve)
	12 Nm (Union nut)

Material specifications

Seal material	NBR (O-ring)
	Perbunan
Material for screw connection	Brass, nickel-plated

Cable/line

External cable diameter Cable 1	18 mm ... 27 mm
Halogen-free	no

Environmental and real-life conditions

Ambient conditions

Degree of protection	IP65

Ambient temperature (operation)	-20 °C ... 80 °C (static)

Drawings

Dimensional drawing

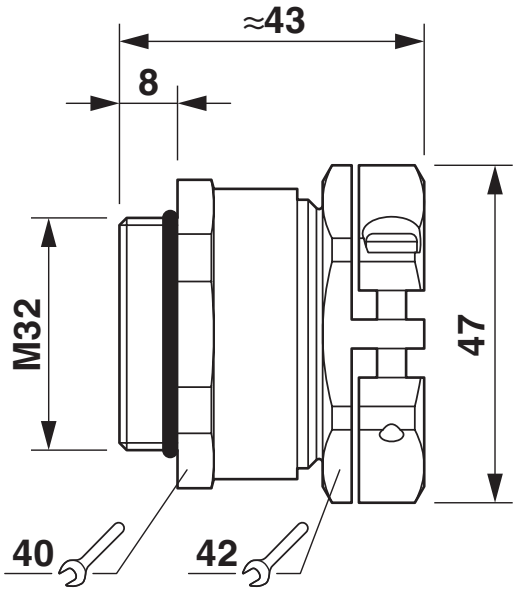

Dimensional drawing

Classifications

ECLASS

ECLASS-13.0	27140801
ECLASS-15.0	27140801

ETIM

ETIM 10.0	EC000441

UNSPSC

UNSPSC 21.0	39121300

Environmental product compliance

EU RoHS

Fulfills EU RoHS substance requirements	Yes
Exemption	6(c)

China RoHS

Environment friendly use period (EFUP)	EFUP-50
	An article-related China RoHS declaration table can be found in the download area for the respective article under "Manufacturer declaration". For all articles with EFUP-E, no China RoHS declaration table issued and required.

EU REACH SVHC

REACH candidate substance (CAS No.)	Lead(CAS: 7439-92-1)
SCIP	0c3fd652-25ee-4cb6-b2a7-bf3e529eb0cb

EF3.1 Climate Change

CO2e kg	1.557 kg CO2e

Phoenix Contact 2026 © - all rights reserved
https://www.phoenixcontact.com

Phoenix Contact USA
586 Fulling Mill Road
Middletown, PA 17057, United States
(+717) 944-1300
info@phoenixcon.com